Roland DGXPRESS
UG-641

Setup Guide

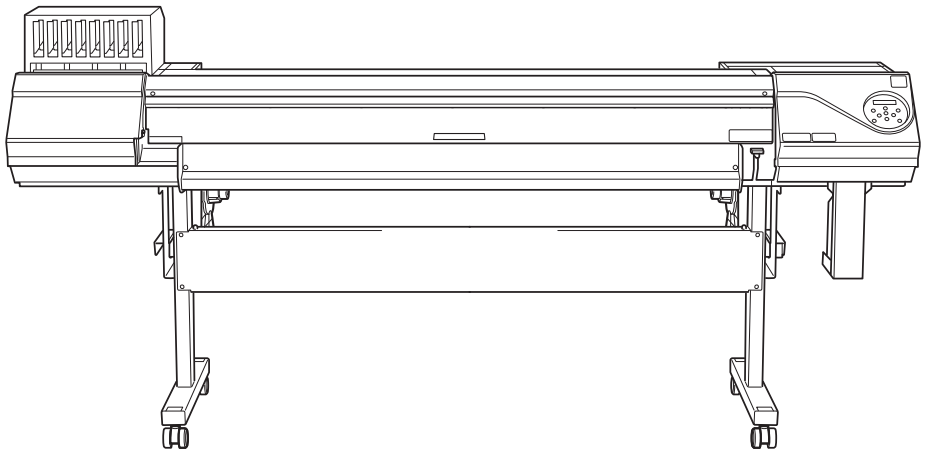

Thank you very much for purchasing this product.

- To ensure correct and safe usage with a full understanding of this product's performance, please be sure to read through this manual completely.
- Unauthorized copying or transferal, in whole or in part, of this manual is prohibited.
- The specifications of this product and the contents of this operation manual are subject to change without notice.
- The operation manual and the product have been prepared and tested as much as possible. If you find any misprints or errors, please inform us.
- Roland DG Corporation assumes no responsibility for any direct or indirect loss or damage that may occur through use of this product, regardless of any failure to perform on the part of this product.
- Roland DG Corporation assumes no responsibility for any direct or indirect loss or damage that may occur with respect to any article made using this product.

Company names and product names are trademarks or registered trademarks of their respective holders.

R4-260701

Copyright © 2023 - 2026 Roland DG Corporation

https://www.rolanddg.com/

Roland DG Corporation

Contents

Introduction 2
1. Checks before Installation 3
About the Documentation for This Machine 3
About Placement and Installation Work 3
Deciding On an Installation Site 4
Temperature and Humidity 5
Installation Space 6
Air Ventilation 7
2. Checking the Included Items 8

Installation 10
1. Assembly and Ink Filling 11
Checks before Operations 11
Step 1: Assembling the Stand 12
Step 2: Attaching the Printer Unit and the Stand 14
Step 3: Installing the Media Holders 15
Step 4: Installing the Drain Bottle 17
Step 5: Removing the Retainers 19
Step 6: Affixing the Labels 21
Step 7: Connecting the Power Cord and the Cable 22
Step 8: Setting the Menu Language and Units of Measurement 25
Step 9: Fill the Machine with Ink 26
2. Installing the Cutting Tool 30
Step 1: Assembling the Cutting Tool 30
Step 2: Installing the Cutting Tool 31
3. Network Settings 34
Step 1: Setting the Computer's Network 34
Step 2: Make the Network Settings on the Printer 38
4. Software Setup 41
Step 1: Creating a Roland DG Connect Account 41
Step 2: Downloading and Installing Roland DG Connect Hub 42
Step 3: Signing in to Roland DG Connect Hub 43
Step 4: Registering the Machine to Roland DG Connect Hub 44
Step 5: Installing VersaWorks from Roland DG Connect Hub 45
Step 6: Configuring VersaWorks Settings 46
5. Installation of Ventilating Equipment 47
Ventilating Equipment 47
Installing the Ventilating Equipment 47

Appendix 49
Location of the Power Rating and Serial Number Label 50
Specifications 51

Introduction

1. Checks before Installation 3
About the Documentation for This Machine 3
About Placement and Installation Work 3
Deciding On an Installation Site 4
Temperature and Humidity 5
Installation Space 6
Air Ventilation 7
2. Checking the Included Items 8

1. Checks before Installation

About the Documentation for This Machine

The following documentation is included with the machine.

Paper Manuals

- **Safety Precautions**

  This manual contains points that must be observed.

- **Regular Maintenance Guidelines**

  This manual provides URLs where procedures can be found for the machine's daily maintenance as well as for the maintenance that must be performed periodically.

Electronic-format Manuals

- **Setup Guide (this document)**

  This manual contains details on how to install the machine and how to configure its initial settings.

- **User's Manual**

  This manual contains details such as how to use and maintain the machine as well as an FAQ (a set of frequently asked questions).

You can view and download the electronic-format manuals from the following URL or QR code.
* You can also view and download the paper manuals.
* You can also view this website from a smartphone.

https://downloadcenter.rolanddg.com/UG-641

About Placement and Installation Work

The placement and installation of this machine must be performed by suitably qualified workers.

⚠ WARNING

Entrust operations such as transportation, unloading, and emplacement to trained professionals.
Suitable equipment and technical skills are required in handling the machine. Tasks that require undue effort may result in a major accident.

Deciding On an Installation Site

Install the machine in a quiet, stable location offering good operating conditions. An unsuitable location can cause accidents, fire, faulty operation, or breakdown.

⚠ WARNING

Install the machine in a location that is level, stable, and able to bear the weight of the machine.
The total weight of the machine may reach 207 kg (456.36 lb.) or more. Installation in an unsuitable location may cause a major accident, including tip over, fall, or collapse.

⚠ WARNING

Never install this machine outside or in any location where exposure to water or high humidity may occur.
Current leakage may cause electrical shock or fire.

⚠ WARNING

Never install the machine close to any flammable object or in a gas-filled location.
Combustion or explosion could occur.

⚠ WARNING

Position the machine so that the power plug is within immediate reach at all times.
This is to enable quick disconnection of the power plug in the event of an emergency. Install the machine next to an electrical outlet. Also, provide enough empty space to allow immediate access to the electrical outlet.

⚠ WARNING

Install the machine in a clean, brightly lit location.
Working in a location that is dark or cluttered may lead to an accident, such as becoming caught in the machine as the result of an inadvertent stumble.

⚠ CAUTION

Ensure adequate ventilation for the work area.
Failing to perform ventilation may result in a health hazard or danger of combustion due to ink fumes.

Unsuitable installation sites

- Locations subject to large fluctuations in temperature or humidity
- Locations subject to shaking or vibration
- Locations where the floor is tilted, not level, or unstable
- Dusty locations
- Locations exposed to direct sunlight
- Locations near air-conditioning or heating equipment
- Locations exposed to water or moving air
- Locations exposed to considerable electrical or magnetic noise or other forms of electromagnetic energy

Temperature and Humidity

Maintain the specified temperature and humidity even when the machine is not in use. Failure to do so may result in malfunction.

- **During operation: Temperature: 15 to 32˚C (59 to 89.6˚F), humidity: 20 to 80%RH (no condensation)**
- **During non-operation: Temperature: 5 to 40˚C (41 to 104˚F), humidity: 20 to 80%RH (no condensation)**

Installation Space

The space shown in the figure is required in order to use this machine.

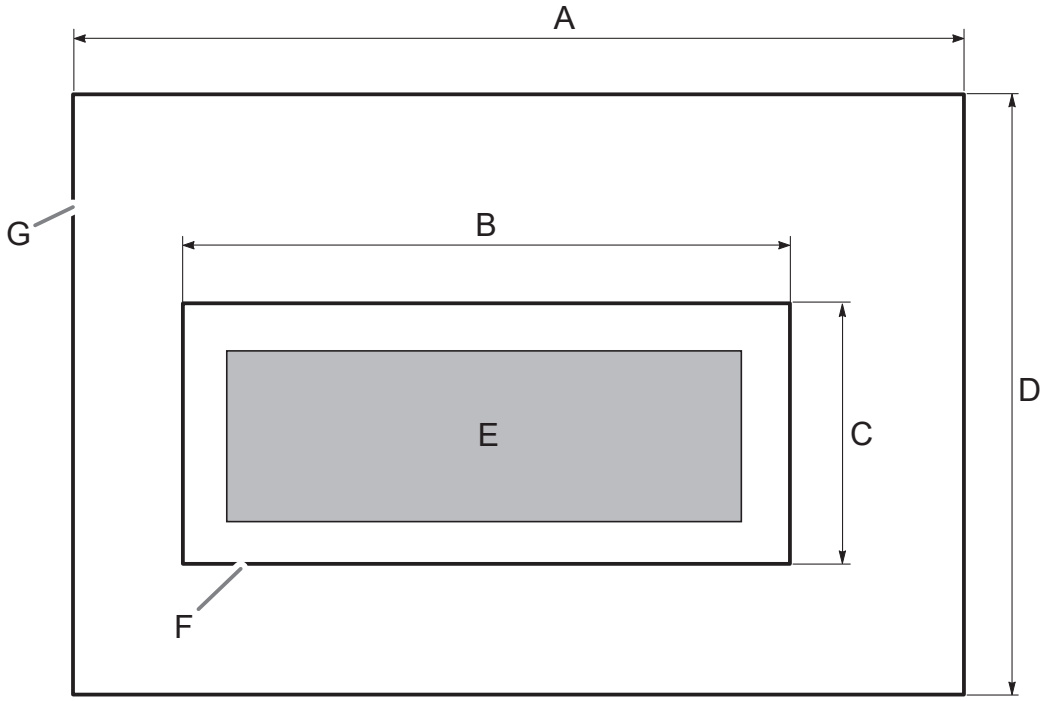

	UG-641
A	4,000 mm (157.5 in.)
B	3,000 mm (118.1 in.)
C	800 mm (31.5 in.)
D	2,000 mm (78.7 in.)
E	Unit
F	Unit space
G	Work space

Air Ventilation

This machine emits a small amount of volatile compounds during printing and for some time after printing, which may cause irritation of your eyes, nose, and throat. When using this machine, make sure to ventilate the area. Install ventilating equipment as necessary.

2. Checking the Included Items

The following items are included with the machine. Make sure they are all present and accounted for.

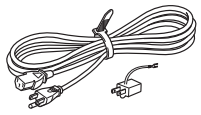 Power cord/power plug adapter (1)*1	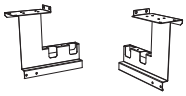 Arms (1 each for right and left)	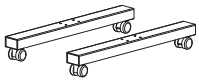 Casters (2)	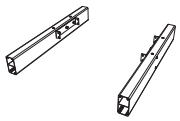 Stand legs (1 each for right and left)
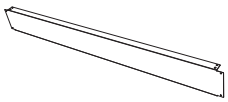 Stand stay (1)		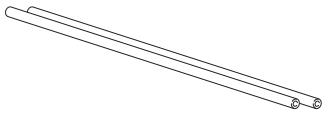 Shafts (2)	
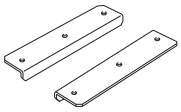 Shaft clamps (2)	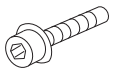 Bolts (40)	 Washers (12)	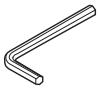 Hexagonal wrench (1)
 Pipe (1)	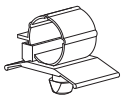 Cable clamps (4)*2	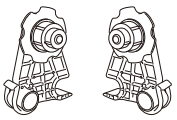 Media holders (1 each for right and left)	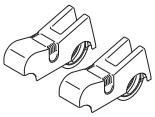 Media stays (2)
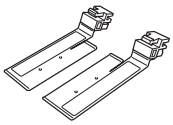 Media clamps (1 each for right and left)	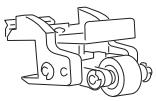 Middle pinch roller*3	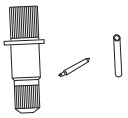 Blade holder/Blade/Pin (1 each)	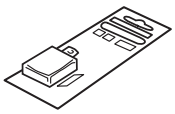 Replacement blade for separating knife (1)
 Drain bottle (1)	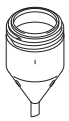 Drain funnel (1)	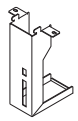 Drain bottle stand (1)	 Cartridge-slot labels (1)
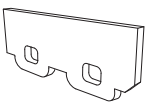 Replacement wiper (1)	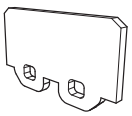 Replacement felt wiper (1)	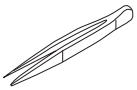 Tweezers (1)	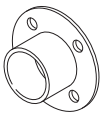 Connection adapter (1)
 Cleaning liquid bottle (1)	 Cleaning sticks	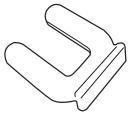 Caster holders (4)	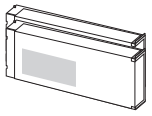 Cleaning liquid cartridges (2)

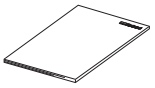 Manuals			

*1 Included only with 100 V specifications

*2 Only two cable clamps are used. The remaining two clamps will be used if TUC-4 (optional item) is purchased.

*3 Installed on the machine.

Installation

1. Assembly and Ink Filling 11
   - Checks before Operations 11
   - Step 1: Assembling the Stand 12
   - Step 2: Attaching the Printer Unit and the Stand 14
   - Step 3: Installing the Media Holders 15
   - Step 4: Installing the Drain Bottle 17
   - Step 5: Removing the Retainers 19
   - Step 6: Affixing the Labels 21
   - Step 7: Connecting the Power Cord and the Cable 22
   - Step 8: Setting the Menu Language and Units of Measurement 25
   - Step 9: Fill the Machine with Ink 26
2. Installing the Cutting Tool 30
   - Step 1: Assembling the Cutting Tool 30
   - Step 2: Installing the Cutting Tool 31
3. Network Settings 34
   - Step 1: Setting the Computer's Network 34
   - Step 2: Make the Network Settings on the Printer 38
4. Software Setup 41
   - Step 1: Creating a Roland DG Connect Account 41
   - Step 2: Downloading and Installing Roland DG Connect Hub 42
   - Step 3: Signing in to Roland DG Connect Hub 43
   - Step 4: Registering the Machine to Roland DG Connect Hub 44
   - Step 5: Installing VersaWorks from Roland DG Connect Hub 45
   - Step 6: Configuring VersaWorks Settings 46
5. Installation of Ventilating Equipment 47
   - Ventilating Equipment 47
   - Installing the Ventilating Equipment 47

1. Assembly and Ink Filling

Checks before Operations

⚠ CAUTION

Unpacking and installation must be carried out by 6 persons or more.
Failure to observe this instruction may cause the machine to fall over, resulting in injury.

Completed Drawing

Front

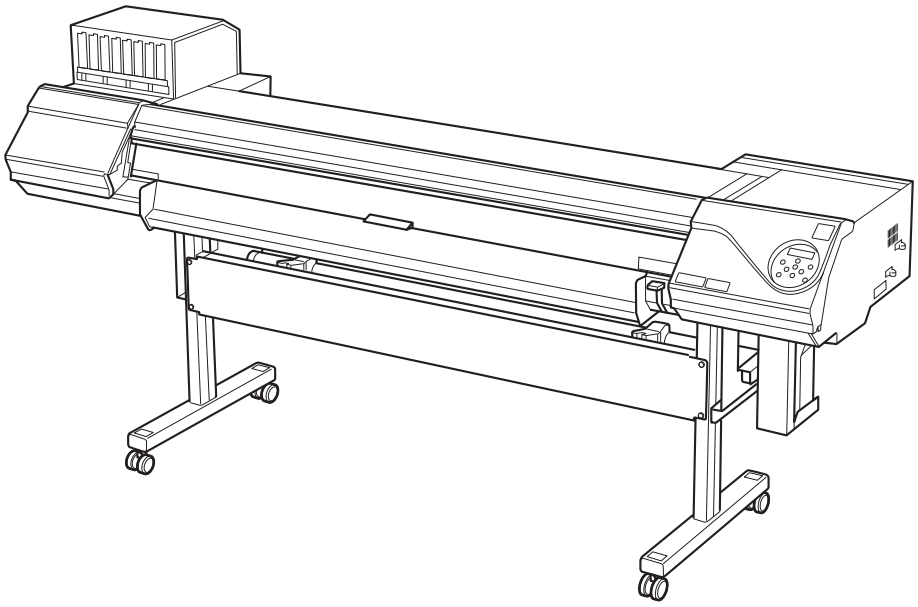

Necessary Tools (Included Items)

- Hexagonal wrench (1)
- Pipe (Use this when the hexagonal wrench is too short to easily tighten bolts) (1)

Step 1: Assembling the Stand

⚠ WARNING

Perform this task with all power switches left switched off.
Otherwise sudden movement of the machine may cause injury.

IMPORTANT

Tighten the bolts securely to fix them in place. Loose bolts may cause the stand to wobble.

Procedure

1. **Attach the stand stay to the stand legs.**

Position the stand legs so that their brackets (A) face the inside, and then tighten the eight bolts in the order shown below.

(1) **Temporarily tighten the four bolts in the two upper locations.**

(2) **After setting washers on the bolts, temporarily tighten the four bolts in the two locations on the sides.**

(3) **Fully tighten the four bolts in the two upper locations.**

(4) **Fully tighten the four bolts in the two locations on the sides.**

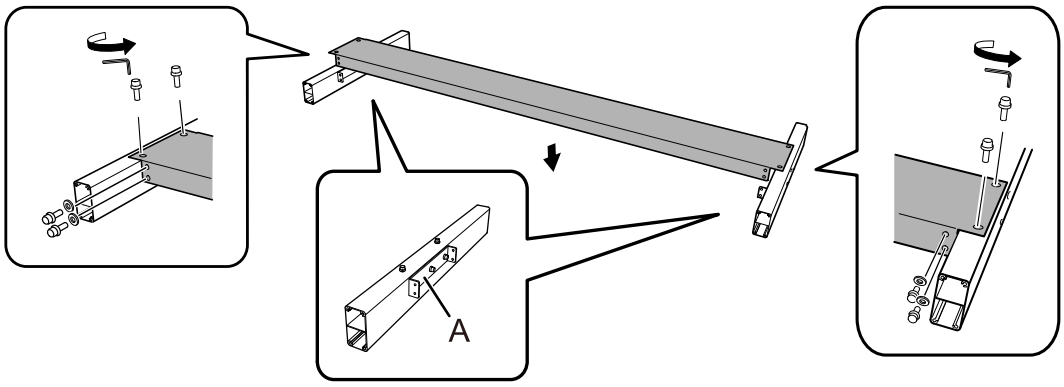

MEMO

Side	Top
Make the gap uniform. 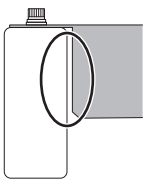	Align these parts so they are parallel. 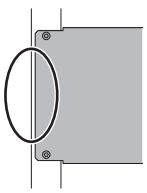

2. **Attach the casters onto the stand leg.**

(1) **Stand up the stand legs so that the longer parts from the stand stay (A) are on top.**

(2) **Place one caster on a stand leg, and then attach the caster by temporarily tightening and then fully tightening the four bolts.**

(3) **Attach the other caster using the same procedure.**

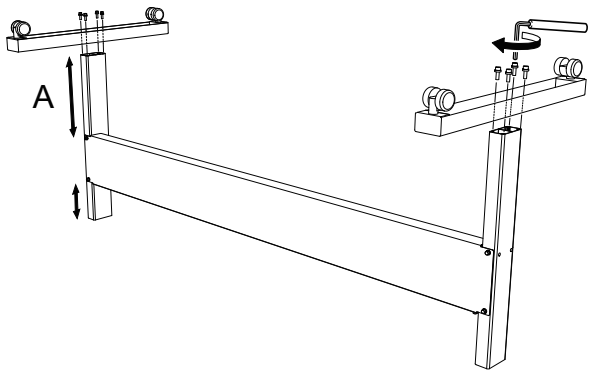

3. **Attach the arms to the stand.**

(1) **Set the stand upright.**

IMPORTANT

Be sure to perform this operation with two workers, each one holding one stand leg. If only one worker performs this operation, the stand stay may bend.

(2) **Temporarily tighten the bolts in the eight upper locations.**

(3) **Temporarily tighten the bolts in the four locations on the sides.**

(4) **Fully tighten all the bolts in the upper locations followed by the bolts in the locations on the sides to completely fix the arms in place on the stand.**

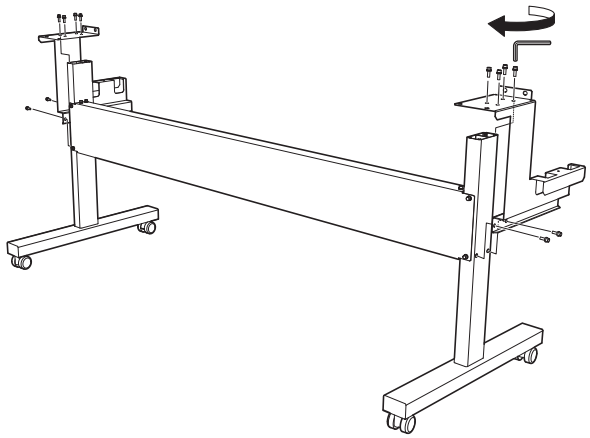

Step 2: Attaching the Printer Unit and the Stand

Procedure

1. **Place the machine on the stand.**

Align the holes on the bottom of the machine with the protrusions on the arms.

2. **After setting washers on the bolts, tighten the eight bolts securely.**

Loose bolts may cause the stand to wobble.

⚠ CAUTION

When lifting the machine, hold the locations shown in the figure.

①	Location to hold by hand (side of the machine)
②	Location to hold by hand (rear of the machine)

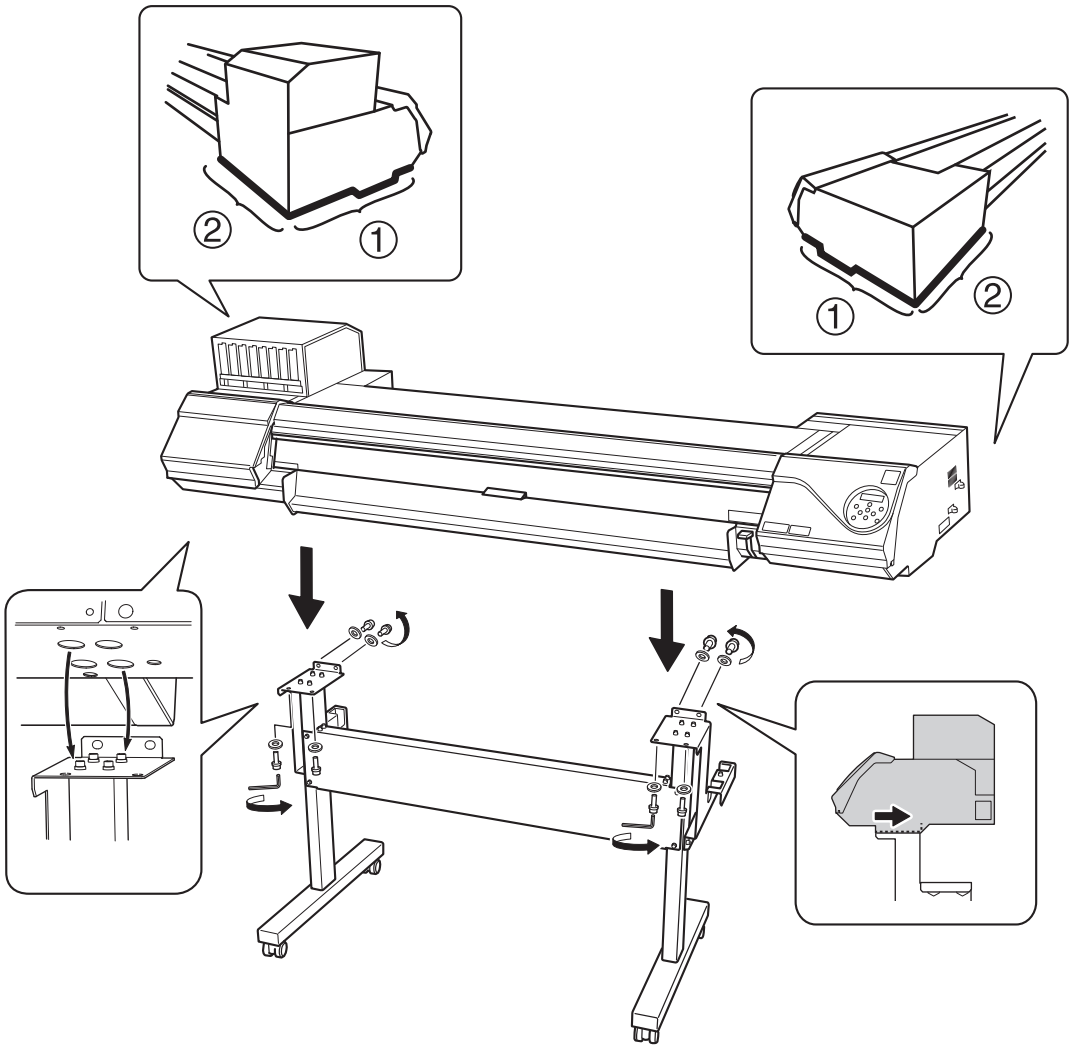

Step 3: Installing the Media Holders

Procedure

1. Place the two shafts on the arms.

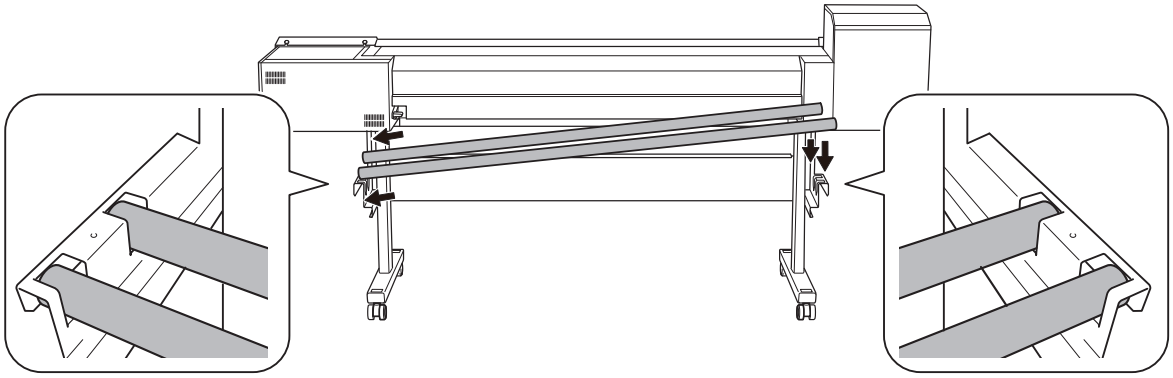

2. Pass the rear shaft through the two media stays.

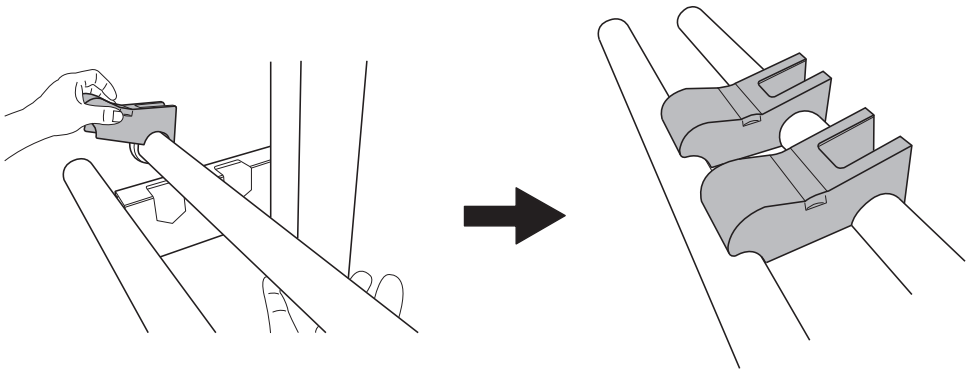

3. Attach the left media holder.

(1) Pass the front shaft through the left media holder.

(2) Catch the left media holder on the rear shaft.

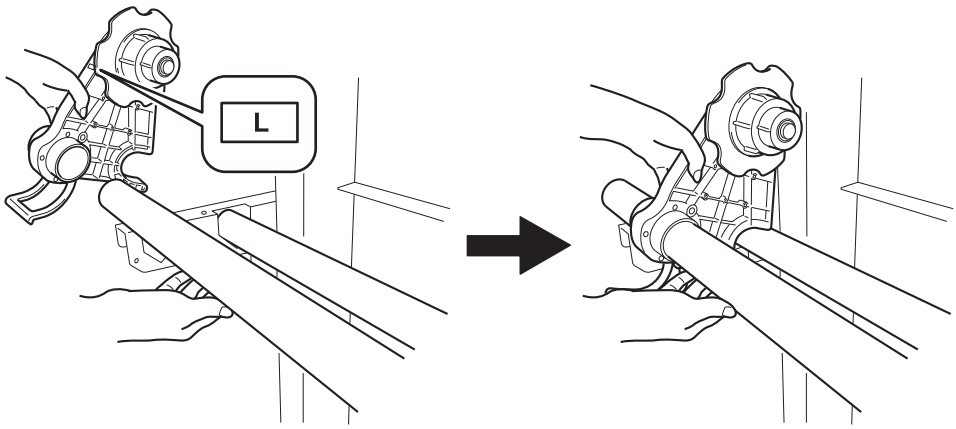

4. Attach the right media holder in the same manner.

5. Raise the levers (A) to secure the left and right media holders.

Position the media holders approximately 100 mm (3.94 in.) from the edges.

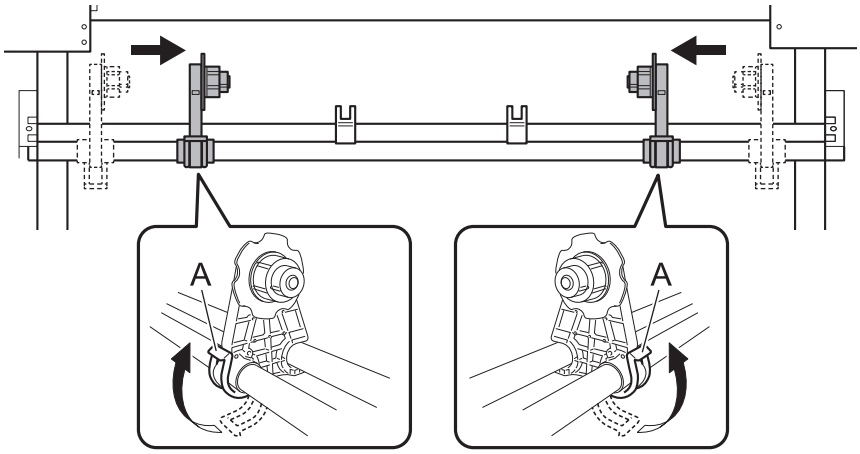

6. **Attach the shaft clamps, securing the shafts with two bolts.**

IMPORTANT

Ensure the media holders do not get caught in the shaft clamps.

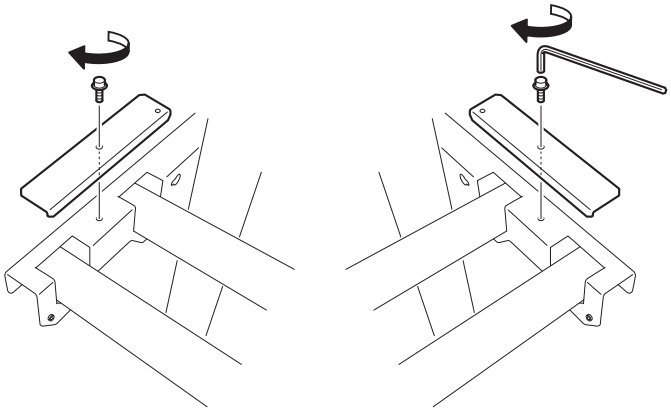

Step 4: Installing the Drain Bottle

Procedure

1. **Remove the drain pad.**

This pad may have soaked up discharged fluid used in the inspection when the printer was shipped. Exercise caution to prevent this fluid from soiling your hands or the floor.

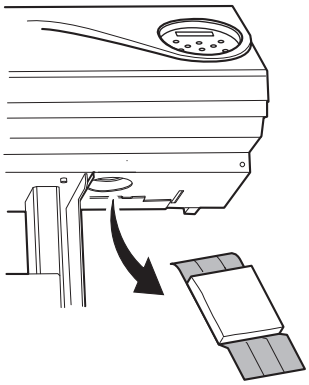

2. **Install the drain funnel.**

Screw the drain funnel all the way into the hole where the bottom plug was attached.

IMPORTANT

Use caution to turn the bottle without applying excessive force.

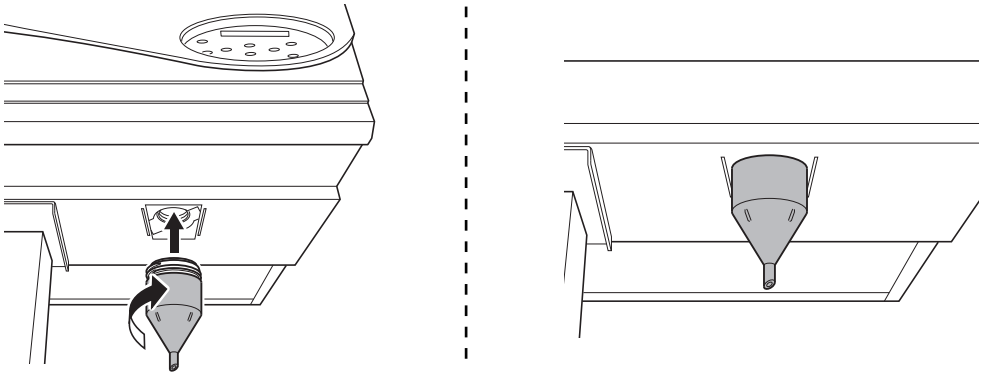

3. **Install the drain bottle stand.**

Insert the drain bottle stand into the groove on the bottom surface of the printer unit, and then shift the drain bottle stand to the left.

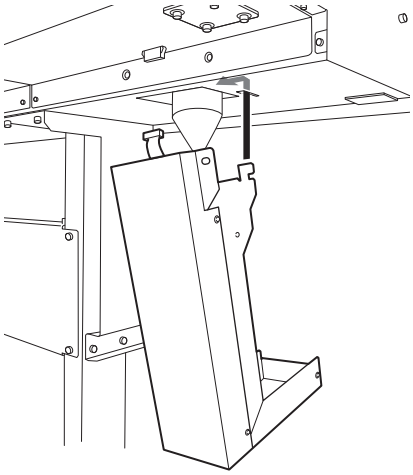

4. **Attach the cable to the printer unit, and then secure the drain bottle stand in place.**

Fully tighten the two bolts.

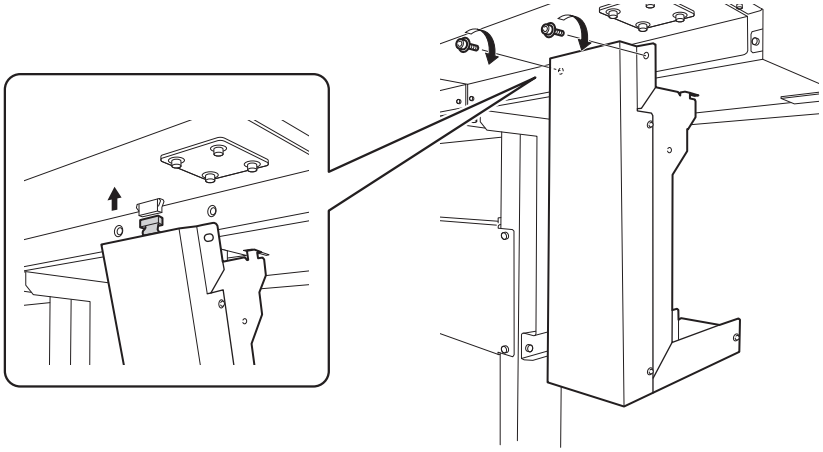

5. **Install the drain bottle in the bottle stand.**

Insert the drain bottle to the back, as far as it will go.

IMPORTANT

Only remove the drain bottle when you are disposing of the discharged fluid. Unnecessarily removing the drain bottle may lead to the discharged fluid spilling.

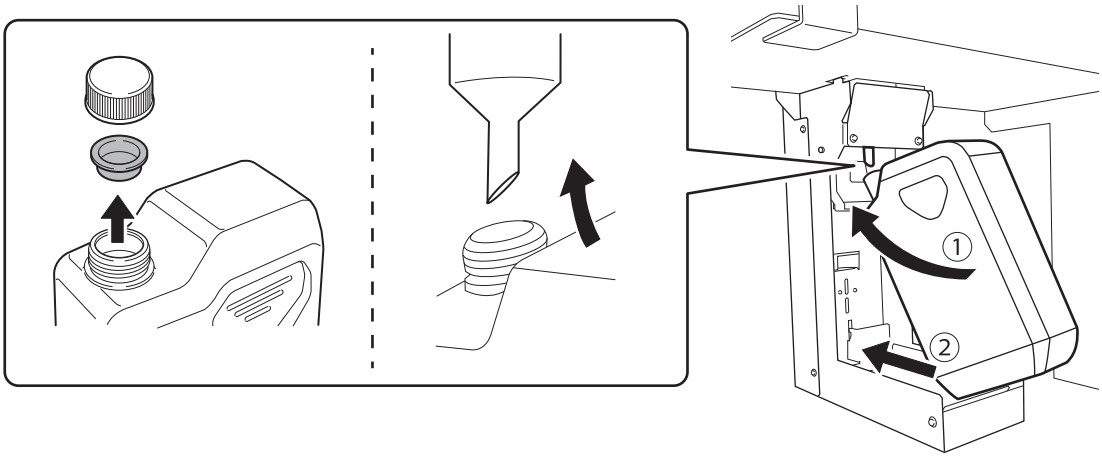

Step 5: Removing the Retainers

IMPORTANT

- Make sure to remove all the retainers. Any that remain may cause faulty operation or breakdown when the power is switched on.
- Store the retainers because they are needed again when transporting the machine.

Procedure

1. **Open the front cover.**

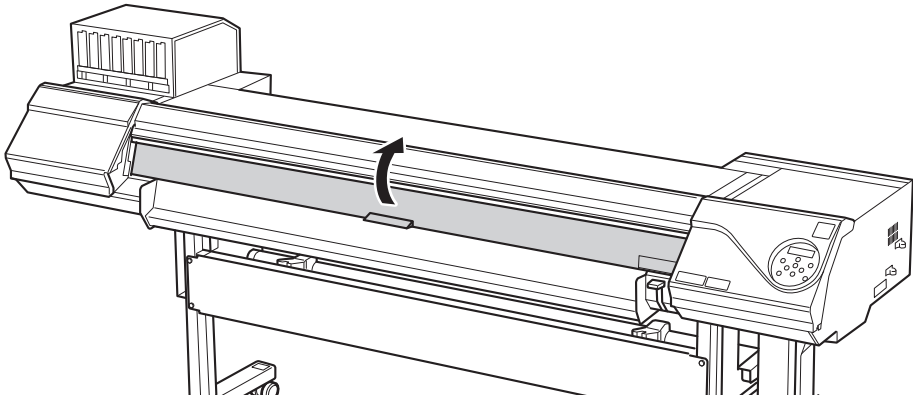

2. **Peel off the tape fixing in place retainer B and the UV-LED device.**

3. **Remove all the retainers indicated by A, B, and C.**

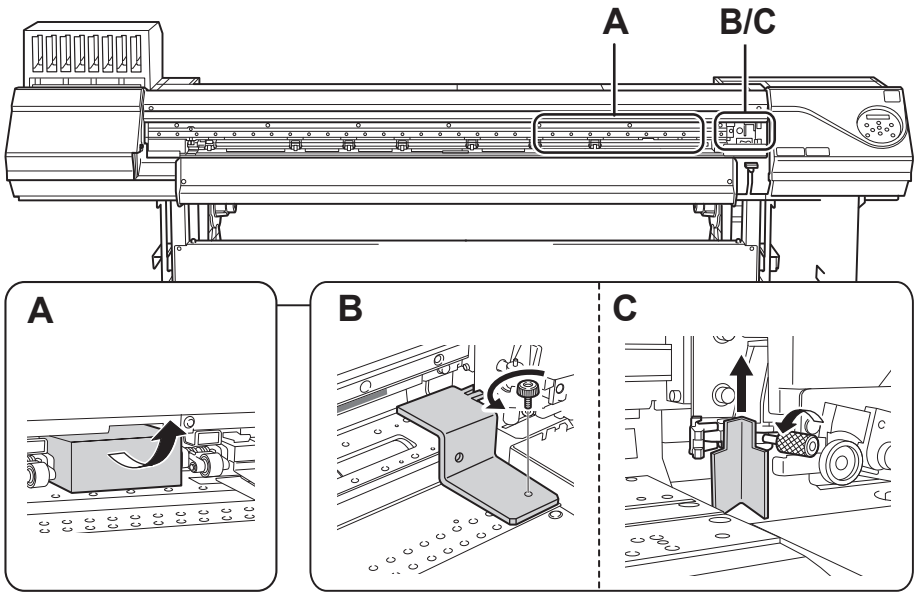

4. **Install the retainer indicated by B at the position indicated in the figure for storage.**

MEMO

Install this retainer with the bolt removed in step 3.

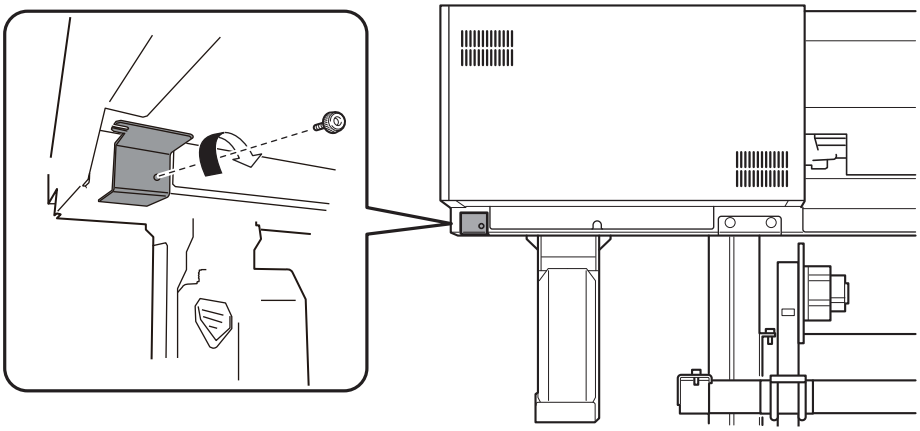

Step 6: Affixing the Labels

When using the machine with the following ink types, affix the included cartridge-slot labels on top of the labels affixed to the machine.

- CMYK

Step 7: Connecting the Power Cord and the Cable

⚠ WARNING

Handle the power cord, plug, and electrical outlet correctly and with care. Never use any article that is damaged.

Using a damaged article may result in fire or electrical shock.

⚠ WARNING

When using an extension cord or power strip, use one that adequately satisfies the machine's ratings (for voltage, frequency, and current).

Use of multiple electrical loads on a single electrical outlet or of a lengthy extension cord may cause fire.

⚠ WARNING

Connect this machine to an electrical outlet. Never connect this machine directly to a power distribution panel or other such fixed wiring equipment.

Doing so increases the risk of fire or electrical shock.

Procedure

1. **Insert the cable clamp.**

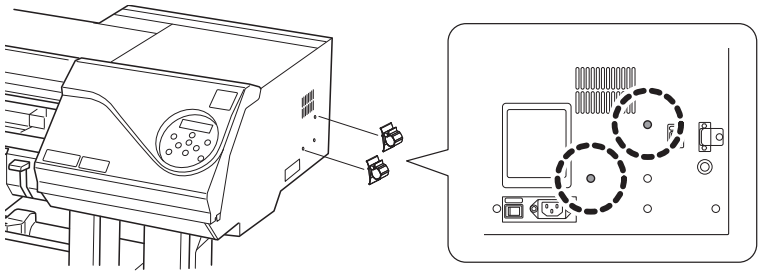

2. **Connect both the power cord and the Ethernet cable (commercially available).**

⚠ WARNING

Perform this task with all power switches left switched off.

Otherwise sudden movement of the machine may cause injury.

⚠ WARNING

Connect to an electrical outlet that complies with this machine's ratings (for voltage, frequency, and current).

Incorrect voltage or insufficient current may cause fire or electrical shock.

⚠ WARNING

Connect to ground.

This can prevent fire or electrical shock due to current leakage in the event of malfunction.

- The recommended Ethernet and Ethernet cable are as follows.
  - Ethernet: 1000 BASE-T
  - Ethernet cable: Category 5 or higher
- Use a power plug connector if the electrical outlet is a two-prong outlet.

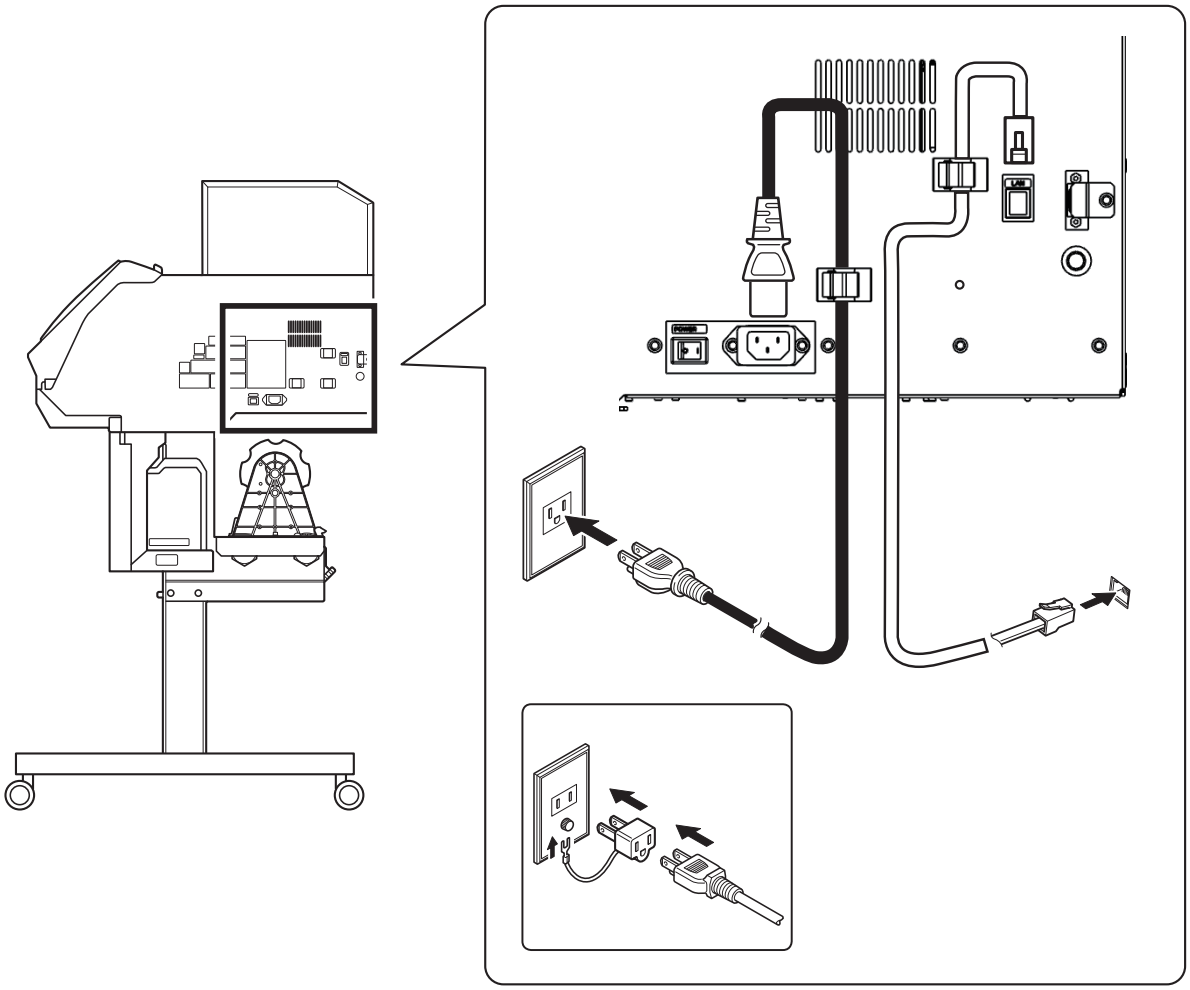

3. Fine-tune the orientation of the machine, and then secure the stand casters.

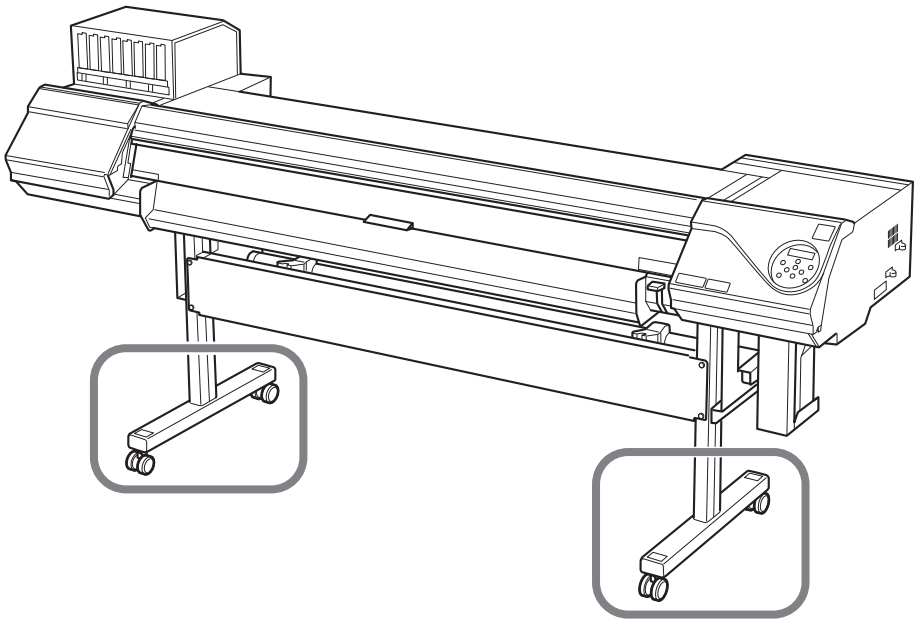

IMPORTANT

After moving the machine, be sure to perform this work.

(1) **Orient the casters so that they face forward.**

(2) **Lock the casters.**

(3) **Use caster holders to fix the casters in place.**

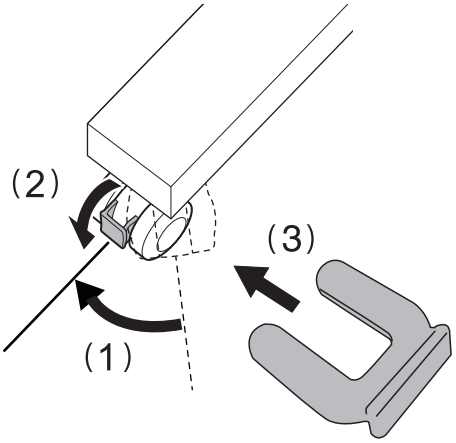

Step 8: Setting the Menu Language and Units of Measurement

Procedure

1. Close the front cover.

2. Turn on the main power switch.

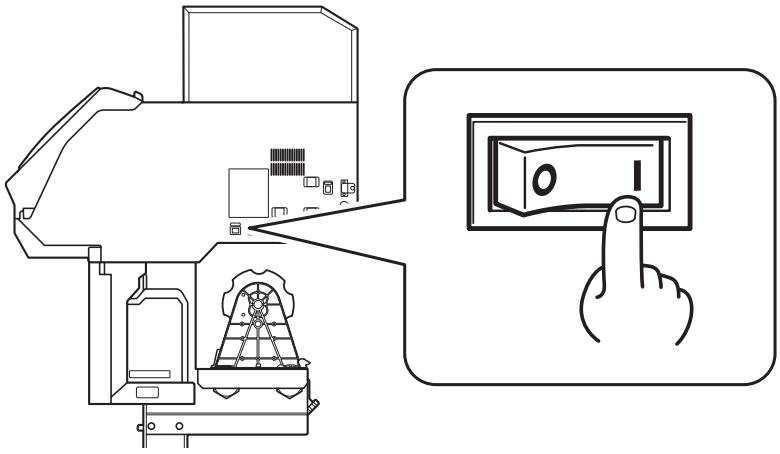

3. Hold down [MENU] and press the sub power switch.

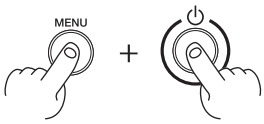

4. Press [▲] or [▼] to select the desired language, and then press [ENTER].



5. Press [▲] or [▼] to select the desired length unit, and then press [ENTER].



6. Press [▲] or [▼] to select the desired unit of measurement (for temperature), and then press [ENTER].



Step 9: Fill the Machine with Ink

Firstly, clean the print heads with the cleaning liquid bottle when installing ink cartridges for the first time after shipment from the factory.

After cleaning, fill the machine with the ink of each color.

The on-screen messages indicate which ink cartridges to insert and remove and when to insert and remove them.

Follow the instructions given in 2. Clean the print heads using the cleaning liquid cartridge.(P. 28) and 3. Insert the Ink Cartridge for Each Color(P. 29).

Items Used in this Procedure

- Two cleaning liquid cartridges
- The ink cartridges to be used

IMPORTANT

- Be sure to use new cleaning liquid cartridges and ink cartridges.
- Never, under any circumstances, use anything other than the specified type of ink or cleaning liquid bottle.

Installing the Ink Cartridges

- Insert each color ink cartridge into the slot labeled with the matching color. Inserting an incorrect cartridge may lead to breakdowns. Be careful not to insert the wrong cartridges. If you insert an incorrect cartridge by mistake, contact your authorized Roland DG Corporation dealer.
- Be sure to insert cartridges horizontally. Otherwise, cleaning and filling may not be performed properly.

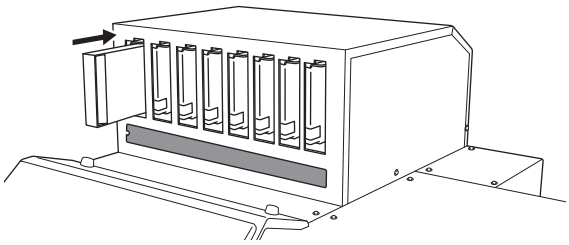

1. Select the ink type.

Procedure

1. **Press [▲] or [▼] to select the ink type, and then press [ENTER].**

Ink type	Cyan (C) Magenta (M) Yellow (Y) Black (K)	Gloss (Gl)	White (W)
D-UA 4 COLOR	✓	–	–
D-UA GlGlWW	✓	✓	✓

2. **Press [◀] or [▶] to select [YES], and then press [ENTER].**



* Check the selected ink type. If the ink type is incorrect, select [NO], and then press [ENTER] to start again from step 1.

3. **Make sure the drain bottle is installed.**

4. **Press [ENTER] to confirm your entry.**

2. Clean the print heads using the cleaning liquid cartridge.

Procedure

1. **When the following screen is displayed, remove the cartridges whose slot numbers are flashing.**

```
REMOVE CL-LIQUID
      12
```

2. **When the following screen is displayed, insert cleaning liquid cartridges into the slots whose numbers are flashing.**

   The cleaning liquid cartridges are not differentiated by color.

```
SET CL-LIQUID
      12
```

   The screen shown below appears.

```
FILLING INK...
>
```

3. **When the following screen is displayed, remove the cleaning liquid cartridges whose slot numbers are flashing.**

```
REMOVE CL-LIQUID
      12
```

4. **When the following screen is displayed, insert cleaning liquid cartridges into the slots whose numbers are flashing.**

   The cleaning liquid cartridges are not differentiated by color.

```
SET CL-LIQUID
      34
```

   The screen shown below appears.

```
FILLING INK...
>
```

5. **When the following screen is displayed, remove the cleaning liquid cartridges whose slot numbers are flashing.**

```
REMOVE CL-LIQUID
      34
```

6. **Repeat steps 2 to 5 until the screen shown below appears.**

```
SET CARTRIDGE
    12345678
```

3. Insert the Ink Cartridge for Each Color

Procedure

1. Before inserting ink cartridges, shake each of them 50 times (about 20 seconds).

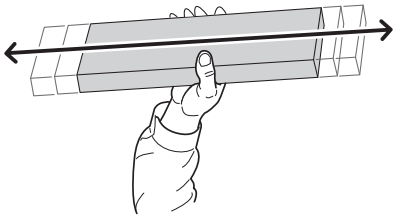

The precipitation of the ingredients in the ink disables printing in normal color. So that the ink mixes well, shake the ink cartridge horizontally with a stroke length of around 5 cm (2 in.) from each end of the ink cartridge.

2. When the following screen is displayed, insert an ink cartridge for each color.

```
SET CARTRIDGE
    12345678
```

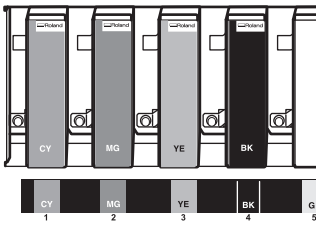

When ink cartridges are inserted in all the slots, the following screen appears.

```
FILLING INK...
>
```

3. When the screen shown below appears, remove the drain bottle and discard the discharged fluid.

```
EMPTY
   DRAIN BOTTLE↵
```

IMPORTANT

When you remove the drain bottle, a few drops of discharged fluid may come out of the machine. Exercise caution to prevent this fluid from soiling your hands.

4. Quickly attach the emptied drain bottle to the machine once more.

5. Make sure the drain bottle is installed, and then press [ENTER].

When the following screen is displayed, filling with ink is finished.

```
SETUP SHEET
```

6. Close the front cover.

2. Installing the Cutting Tool

This operation is unnecessary if you will not use the cutting tool. Tighten the cutting carriage screw lightly when no cutting tool is installed. Keeping the screw firmly tightened causes the cutting tool insertion hole to become gradually smaller, making installation difficult.

⚠ WARNING

Be sure to perform operations as specified by the instructions, and never touch any area not specified in the instructions.

Sudden movement of the machine may cause injury.

⚠ CAUTION

Never touch the tip of the knife.

Doing so may result in injury. The cutting performance of the blade will also be impaired.

Step 1: Assembling the Cutting Tool

Procedure

1. **Insert the pin.**

   Insert the pin to the position where its end sticks out about 3 to 5 millimeters (0.12 to 0.19 in.).

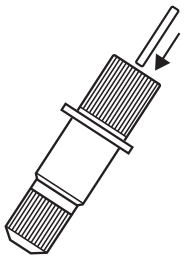

2. **Insert the blade.**

   Insert the blade into the hole so the blade tip is on the outside.

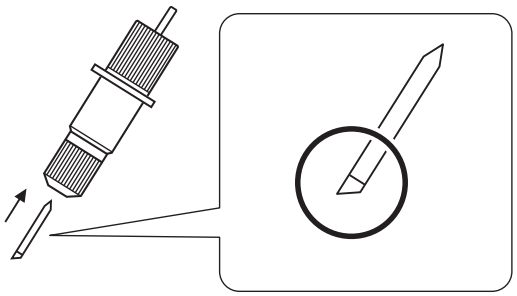

Step 2: Installing the Cutting Tool

1. Display the "REPLACE KNIFE" menu.

Procedure

1. **Display the [MENU].**

2. **Press [▼] several times to display the screen shown below.**



3. **Press [▶] once, and then press [▼] several times to display the screen shown below.**



4. **Press [▶] once, and then press [▼] several times to display the screen shown below.**



5. **Press [ENTER].**

   The cutting carriage moves to a position where blade replacement is possible.

6. **When the following screen is displayed, open the front cover.**



   Preparations are complete when this screen appears.

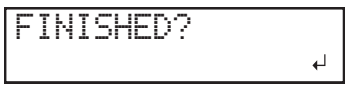

2. Install the Cutting Tool

Procedure

1. Loosen the cutting carriage screw.

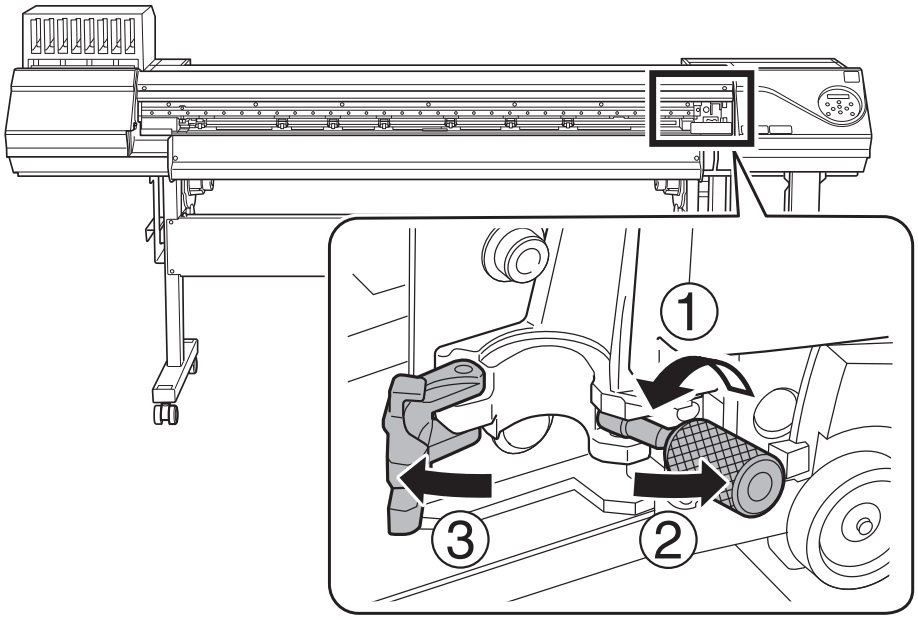

2. Install the cutting tool in the cutting carriage.

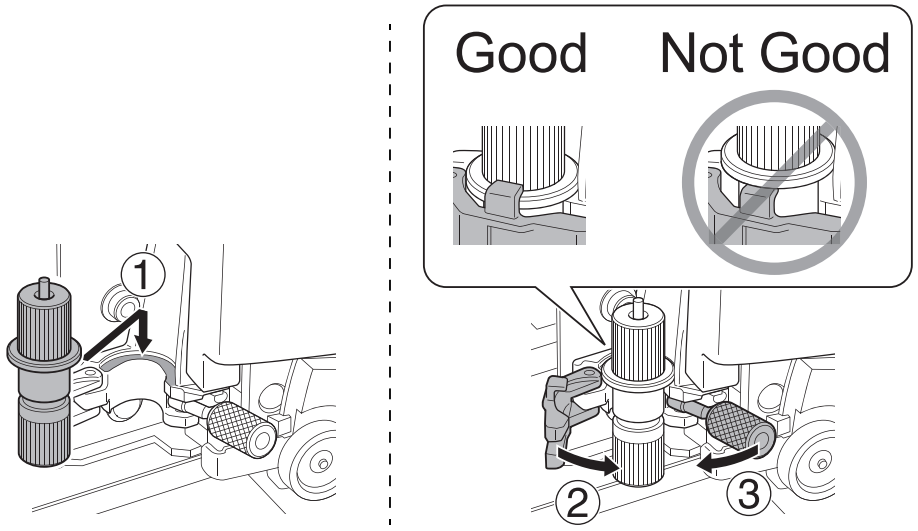

3. Tighten the screw.

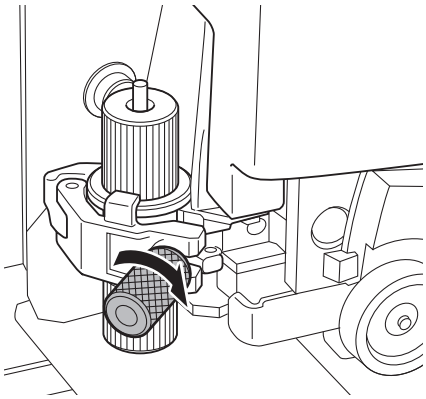

4. Close the front cover.

5. Press [ENTER].

IMPORTANT

Handling the cutting carriage

Leave the cutting-carriage screw loose when no cutting tool is installed. Keeping the screw firmly tightened causes the cutting tool insertion hole to become gradually smaller, making installation difficult.

3. Network Settings

This section explains the setting procedure when using the computer and the machine with fixed IP addresses. The settings used in this section are merely example settings. The procedures and setting values described here may not be suitable for all operating environments.

In an environment where the computer being used is connected to multiple network devices and the Internet, inappropriate settings will have a large effect on the entire network. For detailed information about the settings, consult your network administrator.

Step 1: Setting the Computer's Network

Setting the IP Address on the Computer (Windows)

IMPORTANT

In an environment where the computer being used is connected to multiple network devices and the Internet, inappropriate settings will have a large effect on the entire network. For detailed information about the settings, consult your network administrator.

The method introduced here for setting the network settings applies to the following Windows versions. Even with the same version, the operation steps, button names, and window titles may differ depending on the OS build.

- Windows 11

  Version 24H2

Procedure

1. **Log on to Windows as the [Administrator] or a member of the [Administrators] group.**
2. **Open Control Panel.**

   Search for [**Control Panel**] from the taskbar.
3. **Click [Network and Sharing Center].**
4. **Click [Ethernet] or [Wi-Fi].**
5. **Click [Properties].**

   If a [**User Account Control**] window appears, click [**Continue**].

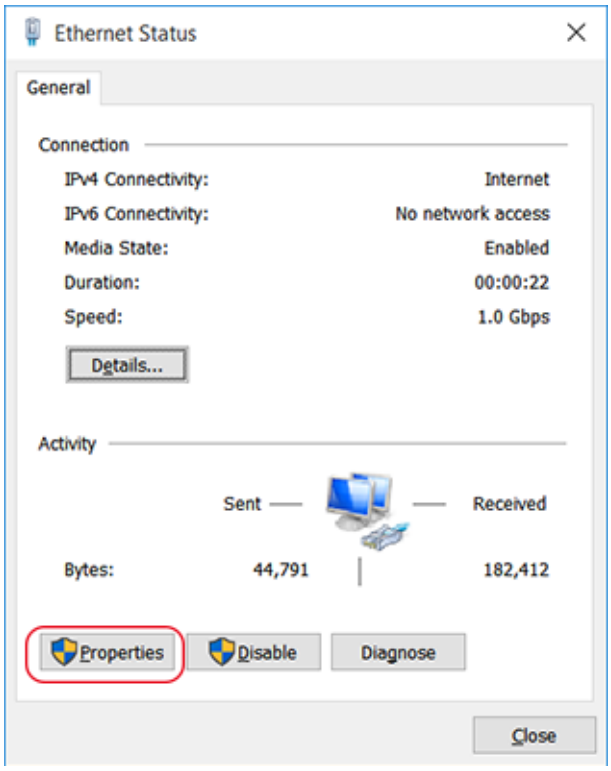

The [**Ethernet Properties**] or [**Wi-Fi Properties**] window appears.

6. **Select [Internet Protocol Version 4 (TCP/IPv4)], and then click [Properties].**

   If the [**Internet Protocol**] check box is clear, select it.

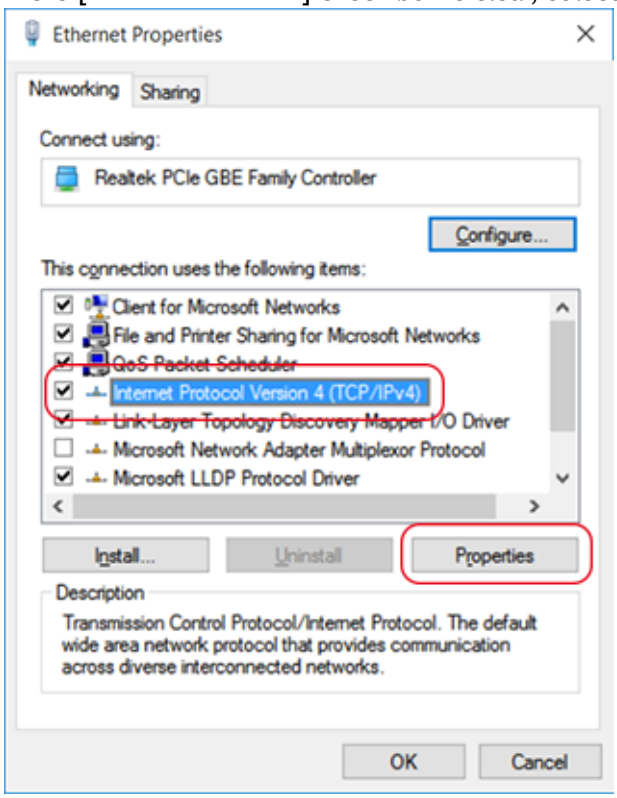

7. **Configure the following settings.**
   a. Click [**Use the following IP address**].
   b. Enter the [**IP Address**], [**Subnet Mask**], and [**Default Gateway**].

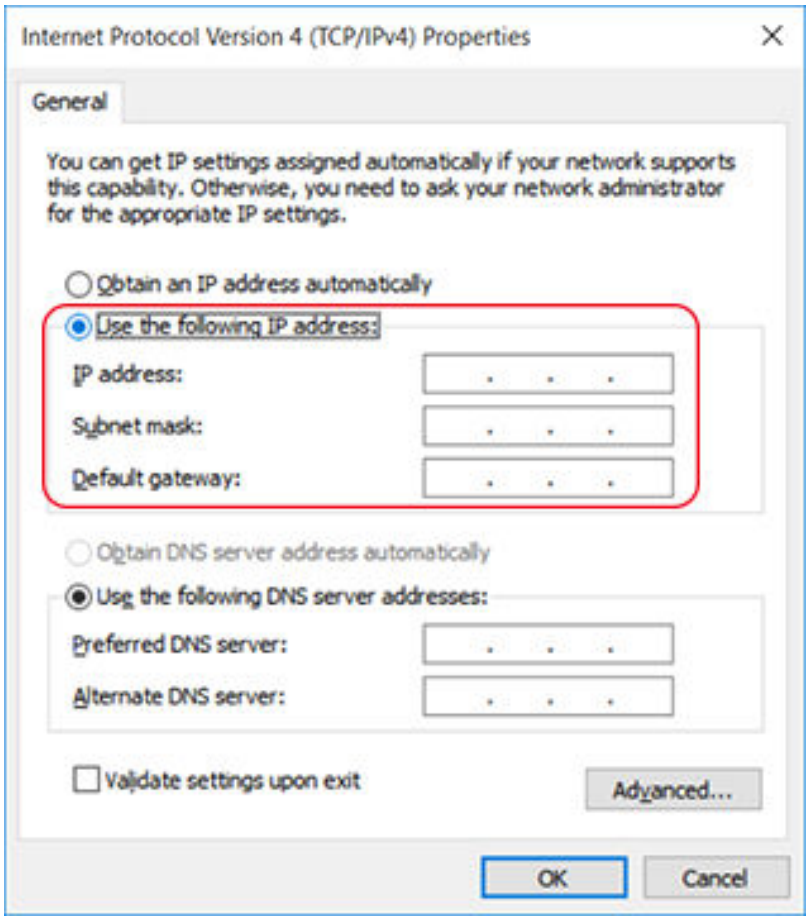

8. Click [OK].

9. Click the following buttons to return to the original state.
   a. [Close] in the [Ethernet Properties] or [Wi-Fi Properties] window
   b. [Close] in the [Ethernet Status] or [Wi-Fi Status] window

Setting the IP Address on the Computer (Mac)

IMPORTANT

In an environment where the computer being used is connected to multiple network devices and the Internet, inappropriate settings will have a large effect on the entire network. For detailed information about the settings, consult your network administrator.

The method introduced here for setting the network settings applies to the following Mac version. Even with the same version, the operation steps, button names, and screen titles may differ depending on the OS build.

- Mac: macOS 15.2

Procedure

1. Log on to the Mac as the [Administrator].

2. From the Apple menu, click [System Settings...].

3. Click [Network]>[Wi-Fi] or the network name (when using Ethernet).

4. Click [Details...].

5. Click [TCP/IP].

6. Select [Manually] for [Configure IPv4].

7. Enter the [IP address], [Subnet mask], and [Router].
For [**Router**], enter the [**Default gateway**].

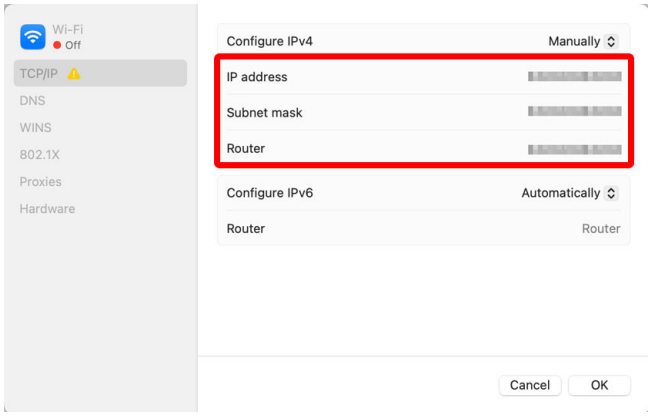

8. Click [OK].

Step 2: Make the Network Settings on the Printer

1. Set the IP address.

IMPORTANT

In an environment where the printer is connected to multiple network devices and the Internet, inappropriate settings will have a large effect on the entire network. For detailed information about the settings, consult your network administrator.

Procedure

1. Press [MENU].
2. Press [▼] several times to display the screen shown below.



3. Press [▶] once, and then press [▼] several times to display the screen shown below.



4. Press [▶] three times to display the screen shown below.



5. Press [▲] or [▼] to select the address number.
6. Press [▶].
7. Repeat steps 5 and 6 to set [IP ADDRESS].
8. When you finish making the setting, press [ENTER].
9. Press [◀] to go back to the screen shown below.



2. Set the subnet mask.

IMPORTANT

In an environment where the printer is connected to multiple network devices and the Internet, inappropriate settings will have a large effect on the entire network. For detailed information about the settings, consult your network administrator.

Procedure

1. Press [▼] to display the screen shown below.



2. Press [▶] twice to display the screen shown below.



3. Press [▲] or [▼] to select the address number.
4. Press [▶].
5. Repeat steps 3 and 4 to set [SUBNET MASK].
6. When you finish making the setting, press [ENTER].
7. Press [◀] to go back to the screen shown below.



3. Set the gateway address.

IMPORTANT

In an environment where the printer is connected to multiple network devices and the Internet, inappropriate settings will have a large effect on the entire network. For detailed information about the settings, consult your network administrator.

Procedure

1. Press [▼] to display the screen shown below.



2. Press [▶] twice to display the screen shown below.



3. Press [▲] or [▼] to select the address number.
4. Press [▶].
5. Repeat steps 3 and 4 to set [GATEWAY ADDR.].
6. When you finish making the setting, press [ENTER].
7. Press [MENU] to return to the original screen.

4. Software Setup

IMPORTANT

A connection to the Internet is required to download and install the software.

Step 1: Creating a Roland DG Connect Account

If you already have a Roland DG Connect ID, you do not need to create an account. Proceed to Step 2: Downloading and Installing Roland DG Connect Hub(P. 42).

Procedure

1. **Start the computer.**

2. **Access the following website.**
   https://connect.rolanddg.com/

3. **Click [Sign Up], and then create a Roland DG Connect account.**
   Create an account according to the information in the Master Initial Setting Guide.
   https://support.rolanddg.com/hc/articles/43642210630297

   MEMO

   You can also use the ID that you have created with [**Sign Up**] in Roland DG Connect with [**Sign In**] in Roland DG Connect Hub.

Step 2: Downloading and Installing Roland DG Connect Hub

Procedure

1. **Log in to Roland DG Connect.**
   https://connect.rolanddg.com/

   MEMO

   If you have not closed the page displayed after you created a Roland DG Connect account, you do not need to log in again. Proceed to Step 2.

2. **Click .**

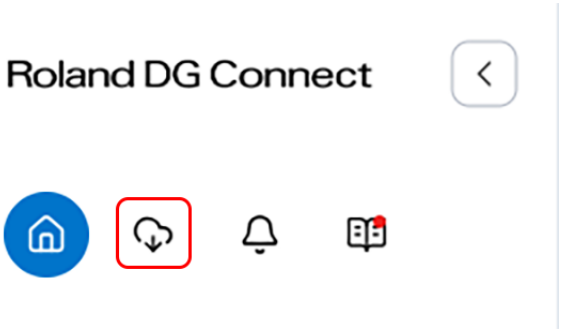

3. **Download Roland DG Connect Hub.**
   Roland DG Connect Hub is available for Windows and Mac. Download the version for your OS.

4. **Install Roland DG Connect Hub from the downloaded file.**
   Follow the on-screen instructions to install Roland DG Connect Hub.

Step 3: Signing in to Roland DG Connect Hub

Start Roland DG Connect Hub and sign in.

If you select the [**Launch Roland DG Connect Hub**] checkbox in the Roland DG Connect Hub setup wizard, Roland DG Connect Hub will start automatically after setup finishes.

Use the ID you created in Step 1: Creating a Roland DG Connect Account(P. 41) to sign in to Roland DG Connect.

Step 4: Registering the Machine to Roland DG Connect Hub

Refer to the procedure below to register the printer to Connect Hub.
https://support.rolanddg.com/hc/articles/44190367491481

Step 5: Installing VersaWorks from Roland DG Connect Hub

Use Roland DG Connect Hub to install VersaWorks.

Procedure

1. **Start [Roland DG Connect Hub].**
   - Windows
     Click the [**Roland DG Connect Hub**] icon in the notification area.
   - Mac
     Click the [**Roland DG Connect Hub**] icon on the Dock.

   IMPORTANT

   When using Windows, if you have cleared the [**Launch Roland DG Connect Hub**] checkbox in the Roland DG Connect Hub setup wizard, start the software from the [**Start**] menu after setup finishes.

2. **In the main window, select the machine to use.**

   MEMO

   If the printer to register cannot be found, see the "Roland DG Connect Help."
   https://support.rolanddg.com/hc/en-us/categories/6469527154585-Roland-DG-Connect

3. **Click** .

   The sidebar is displayed on the right side of the window.

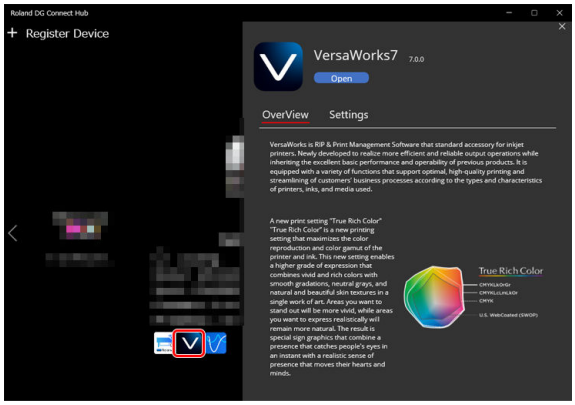

4. **Click [Install].**

   After installation completes, click to start VersaWorks.

Step 6: Configuring VersaWorks Settings

For information on how to connect the printer after installing VersaWorks, see the VersaWorks Installation Guide.

5. Installation of Ventilating Equipment

Ventilating Equipment

In preparing ventilating devices, please note the following points.

- You will be required to use the ventilating devices recommended by Roland DG Corporation. For the details of the recommended products, contact your authorized Roland DG Corporation dealer.
- You will need a hose to connect the ventilating equipment and this machine.

  Connecting port diameter: 38 mm (1.5 in.)

Installing the Ventilating Equipment

The 3 mm (0.1 in.) hexagonal wrench is not included. It must be provided separately.

Procedure

1. **Remove the panel on the right base of the machine.**

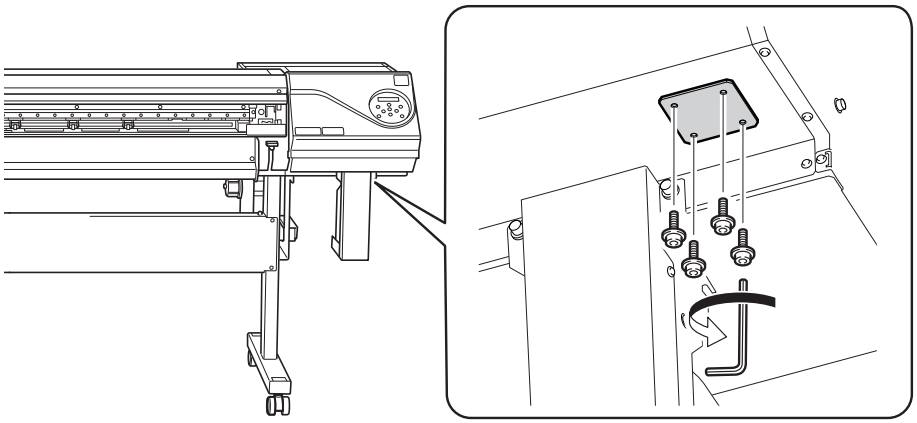

2. **Attach the connection adapter.**

   Use the screws that secured the panel in place on the right base of the machine.

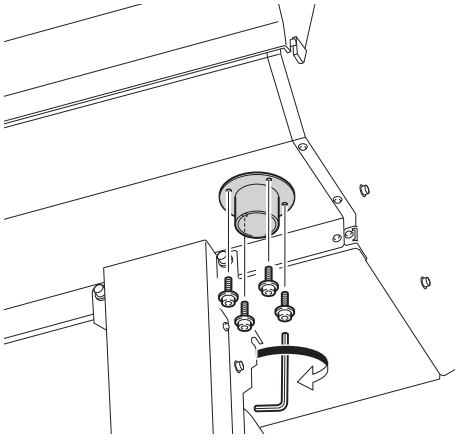

3. **Attach the hose to the connection port on the machine.**

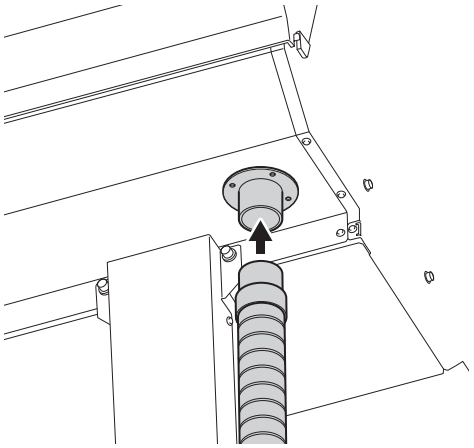

Appendix

Location of the Power Rating and Serial Number Label 50
Specifications 51

Location of the Power Rating and Serial Number Label

Right side

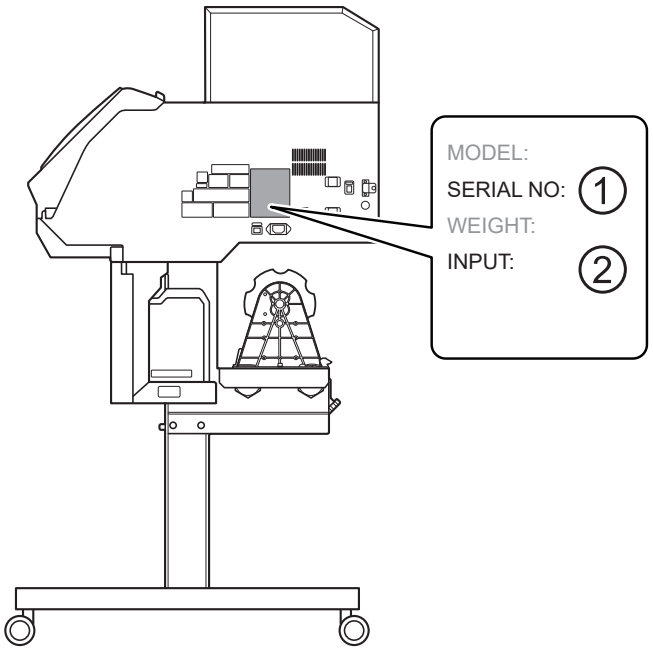

①	Serial number This number is required when you seek maintenance, servicing, or support. Never peel off the label.
②	Power rating Use an electrical outlet that meets the requirements for voltage, frequency, and amperage given here.

Specifications

		UG-641
Printing method		Piezo ink-jet method
Media	Width	210 to 1,625 mm (8.3 to 64 in.)
	Thickness	Max. 1.0 mm (39.3 mil) with liner, for printing Max. 0.4 mm (15.7 mil) with liner and 0.22 mm (8.6 mil) without liner, for cutting
	Roll outer diameter	Max. 210 mm (8.2 in.)
	Roll weight	Max. 40 kg (88 lb.)
	Core diameter	76.2 mm (3 in.) or 50.8 mm (2 in.)
Printing/cutting width*1		Max. 1,600 mm (62.9 in.)
Ink	Type	UV-Ink (D-UA) 220 ml cartridge (white) UV-Ink (D-UA) 500 ml cartridge (cyan, magenta, yellow, black, and gloss)
	Color	Six colors (cyan, magenta, yellow, black, white, and gloss) Four colors (cyan, magenta, yellow, and black)
Ink-curing unit		Built-in UV-LED lamp
Printing resolution (dots per inch)		Max. 1,440 dpi
Cutting speed		10 to 300 mm/s (0.39 to 11.8 in./s)
Blade force*2		30 to 500 gf
Blade	Type	Roland CAMM-1 series blade
	Offset	0.000 to 1.500 mm (0.0 to 59 mil)
Software resolution (when cutting)		0.025 mm/step (0.98 mil/step)
Connectivity		Ethernet (100BASE-TX/1000BASE-T, automatic switching)
Power-saving function		Automatic sleep feature
Rated input		100-240 Va.c. 50/60 Hz 2.8 A
Power consumption	During operation	Approx. 250 W
	Sleep mode	40 W
Acoustic noise level	During operation	63 dB (A) or less
	During standby	53 dB (A) or less
Dimensions (width × depth × height)		2,819 mm × 781 mm × 1,316 mm (111 in. × 31 in. × 52 in.)
Weight		163 kg (360 lb.)
Environment	During operation*3	Temperature: 15 to 32°C (59 to 89.6°F), Humidity: 20 to 80%RH (no condensation)
	Not operating	Temperature: 5 to 40°C (41 to 104°F), Humidity: 20 to 80%RH (no condensation)
Included items		Dedicated stands, power cord, media holders, separating knife, replacement blade, cleaning liquid, drain bottle, User's Manual, software (VersaWorks, Roland DG Connect), etc.

*1 The length of printing or cutting is subject to the limitations of the program.

*2
- 500 gf is the maximum instantaneous blade force.
- The blade force must be adjusted according to details such as the media thickness.

*3 Operating environment (Use the machine in an operating environment within these ranges.)

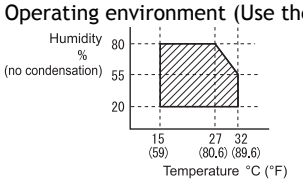


Roland