Roland

# VersaUV LEF2-200

# User's Manual

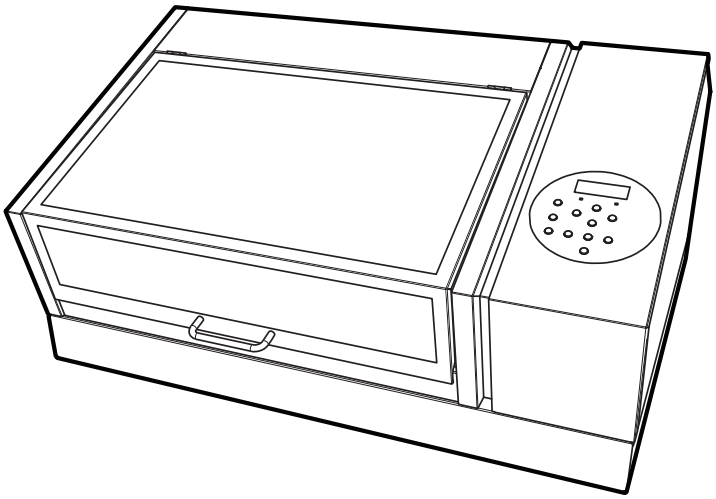

Thank you very much for purchasing this product.

- To ensure correct and safe usage with a full understanding of this product's performance, please be sure to read through this manual completely and store it in a safe location.
- Unauthorized copying or transferal, in whole or in part, of this manual is prohibited.
- The specifications of this product and the contents of this operation manual are subject to change without notice.
- This manual and the product have been prepared and tested as much as possible. If you find any misprints or errors, please inform Roland DG Corporation.
- Roland DG Corporation assumes no responsibility for any direct or indirect loss or damage that may occur through use of this product, regardless of any failure to perform on the part of this product.
- Roland DG Corporation assumes no responsibility for any direct or indirect loss or damage that may occur with respect to any article made using this product.

FA02478
R5-210308
http://www.rolanddg.com/
Copyright © 2019 - 2021 Roland DG Corporation

Roland DG Corporation

# Contents


**Basic Handling Methods ..... 6**

Basic Information ..... 7
Part Names and Functions ..... 8
Printer Unit ..... 8
Head refresher ..... 11
Operation Panel ..... 12
Display Screen ..... 13
Object to Be Printed On ..... 14
Conditions for Settable Objects to Be Printed On ..... 14
Printable Area ..... 15
Features of Inks ..... 16
Features of ECO-UV Inks ..... 16
Features of Primer ..... 16
Menu List ..... 17
Main Menu ..... 17
Function Menu ..... 20
Language and Unit Menu ..... 21

Basic Operations ..... 22
Power Supply Operations ..... 23
Turning the Power On ..... 23
Turning the Power Off ..... 24
Precautions When Operating the Power Supply ..... 25
Sleep Mode (Power-saving Feature) ..... 26
Checks before Operations ..... 27
LAN (Local Area Network) Settings ..... 27
Preparing the Cleaning Liquid for Head Refreshing ..... 28
Preventing Sedimentation in Inks ..... 30

**Output Method ..... 31**

Printing Operations ..... 32
Printing method ..... 33
Checking the Daily Workflow ..... 33
Three Checks before Printing ..... 35
Step 1: Preparing for the Start of Daily Operations ..... 38
Step 2: Printing ..... 49
Step 3: Head Refreshing after Daily Operations ..... 57
Pausing and Canceling Printing ..... 62
Pausing and Resuming Printing ..... 62
Canceling Printing ..... 62

**Optimizing Quality and Efficiency ..... 63**

Optimizing the Setup Method ..... 64
Adjusting the Height ..... 65
Setting the Height of the Object to Be Printed On Manually ..... 65
Adjusting the Distance between the Object to Be Printed On and the Print Heads ..... 67
Enabling Automatic Height Adjustment during Printing ..... 68
Determining the Maximum Value (Threshold) for Automatic Height Adjustment ..... 69
Notes When the Print Surface Is Uneven ..... 70
Changing the Z-axis (Height) Origin ..... 71
Print Area Settings ..... 72
Fixing the Base Position of the Print Area ..... 72

Setting the Print Area Using the Center of the Print Area as the Base Position ....73
Changing Just the Base (Home) Position ....79

Optimizing the Printing Quality ....81
Preventing Ink Discharge Defects ....82
Preventing Soiling of the Object to Be Printed On and Dot Drop-out ....82
Reducing Ink Mist (Ink Spatter) ....83
Preventing Primer Dot Drop-out ....84
Improving Ink Adhesion ....85
Additional UV Lamp Illumination after Printing ....85

Optimizing Work Efficiency ....86
Using the Preset Function ....87
Saving the Current Settings in Presets ....87
Load a Preset and Print ....89
Making Fine Adjustments and Printing a Preset ....90
Reducing Print Time ....91
Omitting the Setting of the Print Area ....91
Continuously Printing Multiple Sets of Data ....92
Minimizing Print Head Movement ....93
Setting the Smallest Possible Print Area ....94
Reducing Paper Used during Printing Tests ....95
Performing Printing Tests Arranged Horizontally ....95
Optimizing Head Refreshing Work When Using Jigs ....96
Setting the Installation Height of the Head Refresher ....96

Optimizing Operation Management ....99
Managing the Operations Appropriately and Efficiently ....100
Setting the Date and Time ....100
Setting the Start Timer ....101
Sounding a Buzzer to Notify the User of the End of Printing ....103
Determining What Happens When Ink Runs Out ....104
Notifying the User of Ink Exceeding Its Shelf Life ....105
Checking the Ink Shelf Life ....106
Setting the Activation Interval for Sleep Mode (Power-saving Feature) ....107
Deactivating the Sleep Mode (Power-saving Feature) ....108
Managing the Basic Settings of the Printer ....109
Setting the Menu Language and Units of Measurement ....109
Viewing System Information ....110
Returning All Settings to Factory Defaults ....111

Other Useful Functions ....112
Print with crop marks. ....113
What Are "Crop Marks"? ....113
Print with crop marks. ....113

**Maintenance ....114**

Introduction ....115
Important Notes on Handling and Use ....116
Printer ....116
Ink Cartridges ....117
Basic Maintenance Knowledge ....118
Types and Timing of Maintenance ....118
Automatic Maintenance Feature and Notes ....120
Alarm Feature ....121
Measures When the Printer Is Not in Use for a Prolonged Period ....122

Regular Maintenance ..... 123
Cleaning the Machine ..... 124
Cleaning the Machine on a Daily Basis ..... 124
Replacing Ink Cartridges ..... 126
Checking for Remaining Ink ..... 126
How to Replace the Ink Cartridge ..... 127
Disposing of Discharged Fluid ..... 129
Precautions for Disposing of Discharged Fluid ..... 129
If the Discharged Fluid Disposal Message Appears ..... 130
If the Drain Bottle Exceeds Its Capacity Limit ..... 132
If the Contents of the Drain Bottle Are Not Visible ..... 134
Maintenance That Must Be Performed Daily ..... 135
Maintenance of Ink Cartridges ..... 135
Printing Tests and Normal Cleaning ..... 136
Head Refreshing Method ..... 146
When Normal Cleaning Is Not Effective ..... 151
Medium Cleaning Method ..... 151
Powerful Cleaning Method ..... 153
Manual Cleaning ..... 157
When Manual Cleaning Is Necessary ..... 157
Manual Cleaning Method ..... 158
Cleaning the UV-LED Devices ..... 163
When UV-LED Device Cleaning Is Necessary ..... 163
How to Clean the UV-LED Devices ..... 164

Advanced Maintenance ..... 167
Restoring the White Ink Concentration ..... 168
Circulating the Ink to Clear Precipitation ..... 168
Handling Severe Dot Drop-out ..... 170
Handling Severe Dot Drop-out with Spot Color Ink ..... 170
Cleaning All Print Heads ..... 174
Partially Restricting the Print Heads Used for Printing ..... 176
Emergency Measure) Cleaning the Print Head Surface ..... 186

Replacing Consumable Parts and Products ..... 187
How to Replace Consumable Parts ..... 188
Replacing the Wipers and Wiper Cleaner ..... 188
Replacing the Filter ..... 193
Replacing the Cleaning Pad Unit ..... 196
Inquiries for Consumable Parts and Products ..... 197
Items That You Can Purchase and Replace by Yourself ..... 197
Items That Require Inquiries before Replacement ..... 197

**Troubleshooting Methods ..... 198**

Print Quality Problems ..... 199
Printed results are coarse or contain horizontal stripes ..... 200
Do the print heads cause dot drop-out? ..... 200
Are the software RIP settings appropriate? ..... 200
Is the printer installed in a level and stable location? ..... 200
Is the printer installed in a location that is not exposed to direct sunlight? ..... 200
Is the object to be printed on loaded and set up correctly? ..... 200
The Object to be Printed on Becomes Soiled When Printed ..... 201
Are the print heads dirty? ..... 201
Is the humidity of the room too low? ..... 201
Colors are unstable or uneven ..... 202
Did you shake the ink cartridges before installing them? ..... 202
Has the printer been used continuously for a long time? ..... 202

Was printing paused partway through? 202
Is the printer installed in a level and stable location? 202
Is the printer set to pause during printing for cleaning? 202
Is the printer being used in a location subject to severe changes in the operating environment? 202
Are the settings for the "PRESET" menu item appropriate? 202

Machine Problems 203
The Print Heads Do Not Move 204
What to Do First 204
If the Print Heads Still Do Not Move 204
The printer unit does not run 205
Is the power switched on? 205
Is [SETUP] lit? 205
Are any covers open? 205
Is the top menu displayed? 205
Is [PAUSE] lit? 205
Has the ink run out? 205
Is a message displayed on the screen? 206
Are the cables connected? 206
Is the status LED for the LAN cable connector lit in green? 206
Are the LAN settings correct? 206
Did the software RIP end abnormally? 206
Is the temperature of the room too low? 207
The flat table does not move 208
Is something stuck in one of the movable components inside of the machine? 208
Are any covers open? 208
The Head Gap Sensor Does Not Detect the Object to Be Printed on 209
Is something covering the head gap sensor or has it attracted dust? 209
It Is Not Possible to Check the Amount of Discharged Fluid in the Drain Bottle 210
Is ink splattered around the inside of the drain bottle? 210

Messages on the Operation Panel 211
Messages 212
"1 ■ 2 ■ 3 ■ 4 ■ 5■ 6 ■ 7 ■ 8 ■" 212
"PRESS THE POWER KEY TO CLEAN" 212
"CIRCULATING INK" 212
"SHAKE WHITE INK CARTRIDGE" 212
"FINISHED PRINT" 212
"SET CARTRIDGE""REMOVE CARTRIDGE" 212
"CLOSE XXX COVER""DRY UP MAY DAMAGE THE HEAD" 212
"CLOSE XXX COVER" 212
"SET CL-LIQUID""REMOVE CL-LIQUID" 213
"READJUST TABLE HEIGHT" 213
"DO HEAD REFRESH" 213
"INSTALL DRAIN BOTTLE" 213
"EMPTY DRAIN BOTTLE" 213
"SETUP MEDIA" 213
"TIME FOR FILTER REPLACE" 213
"TIME FOR WIPER REPLACE" 214
"TIME FOR MAINTENANCE" 214
Error Messages 215
"AREA TOO SMALL CONTINUE" 215
"PRINT AREA TOO SMALL" 215
"CANCELED FOR TABLE HEIGHT" 215
"CHECK TABLE HEIGHT" 215
"CHECK HEIGHT OF HEAD REFRESHER" 215
"ADJUST FAILED" 216
"TEMPERATURE IS TOO HIGH **°C" 216
"TEMPERATURE IS TOO LOW **°C" 216

"DATA ERROR CANCELING..." ..... 216
"INK SHELF LIFE EXPIRE 123456" ..... 216
"WRONG CARTRIDGE" ..... 217
"WRONG HEAD IS INSTALLED" ..... 217
"AVOIDING DRY UP TURN POWER OFF" ..... 217
"MOTOR ERROR TURN POWER OFF" ..... 217
"CANCELED FOR MOTOR PROTECTION" ..... 217
"SERVICE CALL ****" ..... 217
"CAN'T PRINT CROP CONTINUE?" ..... 218

**Appendix ..... 219**

Operations When Moving the Unit ..... 220
Moving the Unit ..... 221
Step 1: Cleaning All Print Heads ..... 221
Step 2: Securing the Print Heads and the Flat Table Using Retainers ..... 224
Step 3: Reinstalling the Machine ..... 226

Main Specifications ..... 227
Dimensional Drawings ..... 228
When using a jig: Hole positions for the head refresher ..... 229

MEMO ..... 230

# Basic Handling Methods

# Basic Information


Part Names and Functions ..... 8
- Printer Unit ..... 8
- Head refresher ..... 11
- Operation Panel ..... 12
- Display Screen ..... 13

Object to Be Printed On ..... 14
- Conditions for Settable Objects to Be Printed On ..... 14
- Printable Area ..... 15

Features of Inks ..... 16
- Features of ECO-UV Inks ..... 16
- Features of Primer ..... 16

Menu List ..... 17
- Main Menu ..... 17
- Function Menu ..... 20
- Language and Unit Menu ..... 21

# Part Names and Functions

## Printer Unit

### Front

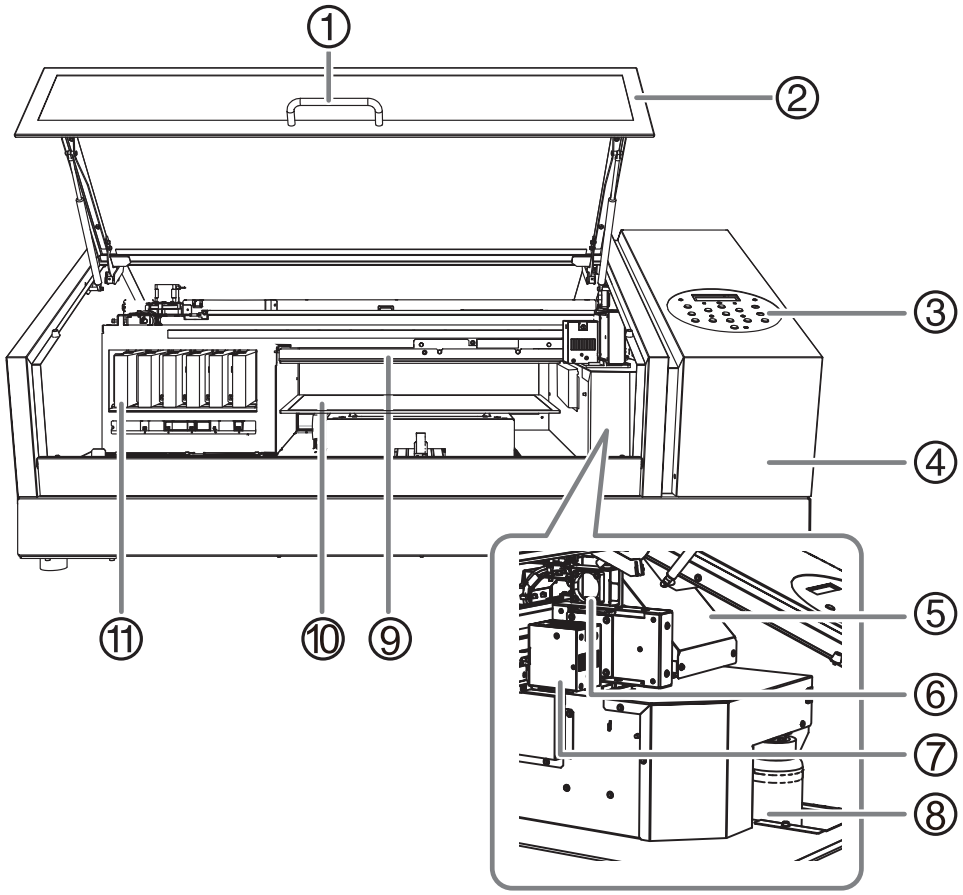


| No. | Name | Function overview |
|---|---|---|
| ① | **Handle** | Hold this handle to open and close the font cover gently. |
| ② | **Front cover** | Keep this cover closed except when necessary, such as when loading the object to be printed on. |
| ③ | **Operation panel** | The panel containing the buttons used to operate the machine. |
| ④ | **Panel cover** | Remove this when performing maintenance such as wiper replacement. |
| ⑤ | **Print-head carriage** | The print heads are inside this carriage. |
| ⑥ | **Carriage fan** | Spins while printing. |
| ⑦ | **UV-LED device** | Shines the UV light used to cure the ink. |
| ⑧ | **Drain bottle** | Discharged fluid is stored in this bottle. |
| ⑨ | **Head gap sensor** | Detects the height of the object to be printed on. |
| ⑩ | **Flat table** | Table on which the object to be printed on is loaded. |
| ⑪ | **Cartridge slots** | The location where ink cartridges are installed. |

⚠ CAUTION **Do not place your hands on or touch the flat table or inside the machine (except for the cartridge slots).**
**Doing so may cause burns.**

## Flat Table

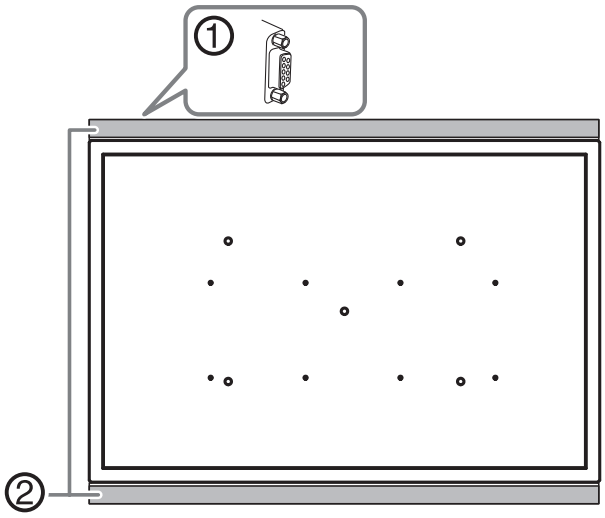


| No. | Name | Function overview |
|---|---|---|
| ① | **D-SUB port** | This is a connection port for optional products. Do not connect any cable that is not for the dedicated optional products. |
| ② | **Extension plate** | ⚠ CAUTION **Do not place any object on top of the plate or press on it with force.** **Doing so may cause damage.** |

⚠ CAUTION **Do not place any objects in front of or behind the flat table.**

**The flat table moves horizontally and vertically. If there is an object between the flat table and the machine, it can be caught and cause the machine to malfunction.**

⚠ CAUTION **If anything drops toward the back of the flat table, turn off all power switches before looking for the dropped object.**

**Otherwise sudden movement of the machine may cause injury.**

## Rear

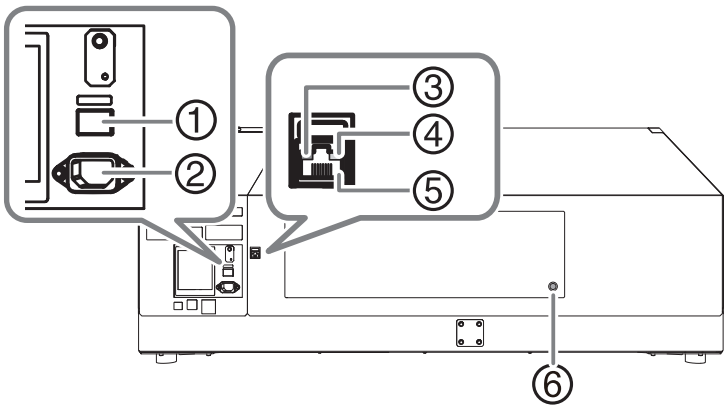


| No. | Name | Function overview |
|---|---|---|
| ① | **Main power switch** | Switch the main power on/off. |
| ② | **Power cable port** | Use this to connect the power cable. |
| ③ | **Status LED** | This lights up green when the connection to the network is normal. |
| ④ | **Activity LED** | This flashes yellow while data is being received from the network. |
| ⑤ | **LAN cable connector** | Use this to connect the LAN cable. |
| ⑥ | **AC adapter port** | Connect the AC adapter cable to this port. Do not connect any cable other than the AC adapter cable supplied with dedicated optional products. |

## Head refresher

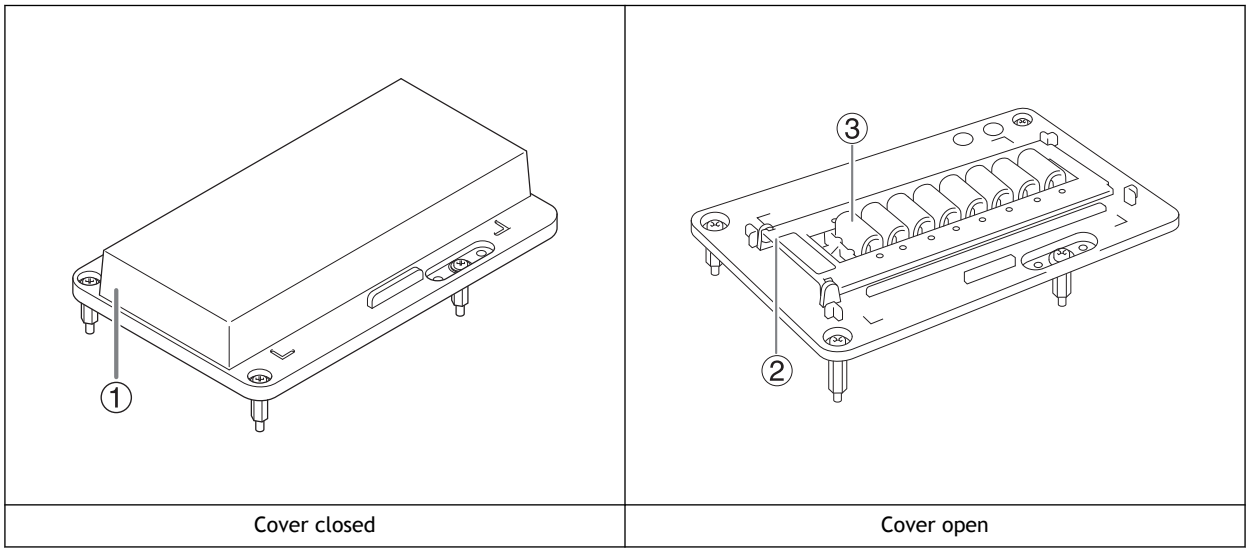


Cover closed | Cover open

| No. | Name | Function overview |
|---|---|---|
| ① | Cover | Keep the cover closed when the machine is not in use. |
| ② | Sheet retaining cover | This cover keeps the head cleaning sheet, used for head refreshing, in place. |
| ③ | Cleaning pad | A total of eight cleaning pads are provided. These consumables should be replaced about every six months.<br>P. 196 "Replacing the Cleaning Pad Unit" |

**IMPORTANT**

Continue using the same head refresher with a single machine. Using a head refresher with multiple machines may lead to print head malfunctions.

**MEMO**

When the head refresher is not in use, it can be put in the space on the left side of the machine.

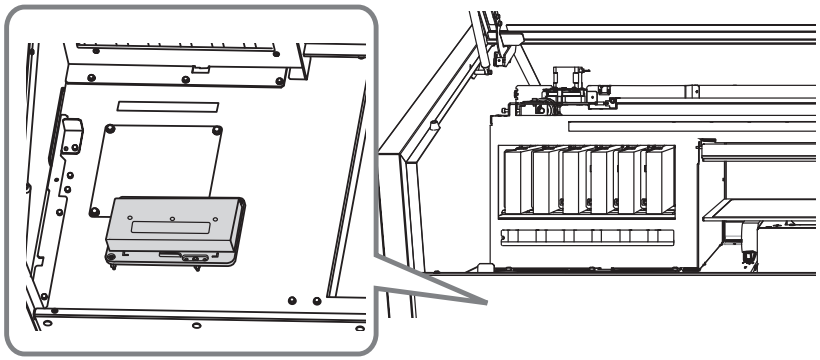

## Operation Panel

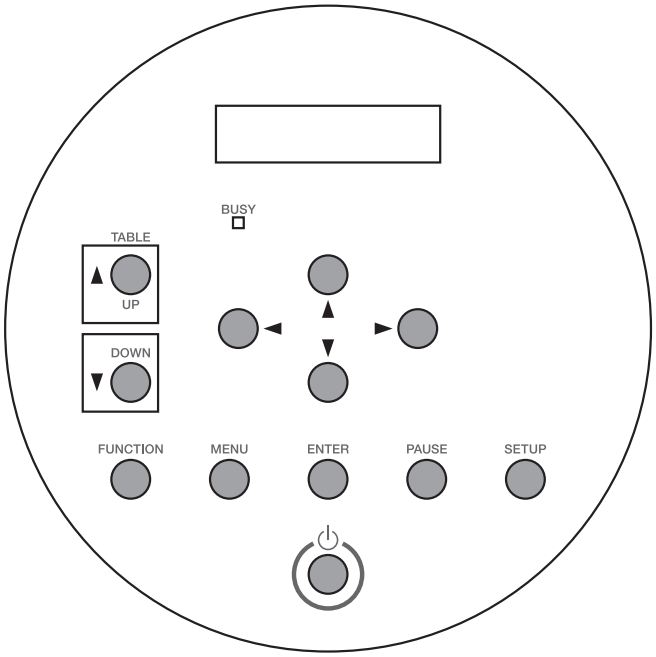


| Part | Name | Details | Notation in this manual |
|---|---|---|---|
| W:508mm L:330mm<br>H:100.0mm | Display screen | This displays various setting menus and other information. | |
| BUSY | BUSY light | This lamp lights up during printing and other such operations. | [BUSY] |
| UP | TABLE UP key | The flat table goes up. | [UP] |
| DOWN | TABLE DOWN key | The flat table goes down. | [DOWN] |
| | Cursor keys | Use these keys to select settings for menu items, to move the object to be printed on, and for other similar operations. | [◀][▼][▲][▶] |
| FUNCTION | FUNCTION key | You press this when entering the setting menu for cleaning of the print heads, printing tests, and so on. | [FUNCTION] |
| MENU | MENU key | Press this to enter the menus for various settings. | [MENU] |
| ENTER | ENTER key | Use this for such tasks as enabling setting values. | [ENTER] |
| PAUSE | PAUSE key | Pauses printing. It lights when operation is paused. | [PAUSE] |
| SETUP | SETUP key | Displays the setup screen. | [SETUP] |
| | Sub power switch | This switches the printer on and off. (To switch the printer off, hold down the switch for one second or longer). The light flashes slowly when the machine is in sleep mode. | |

## Display Screen

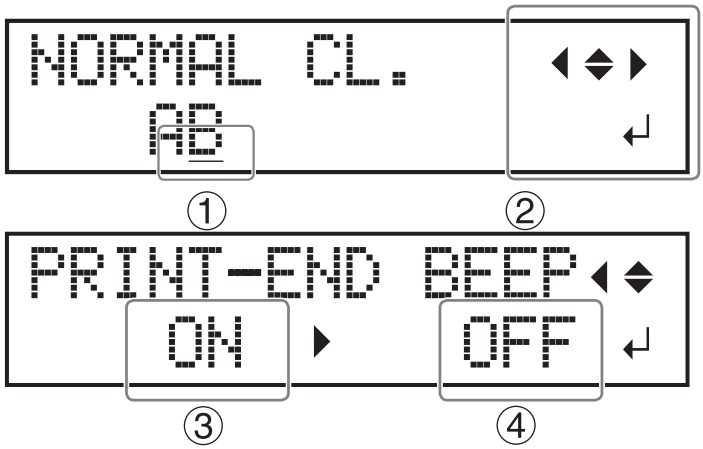


| | | | |
|---|---|---|---|
| ① | Cursor | | Displays the setting to be changed. You can move it with the cursor keys. |
| ② | Direction mark | ◀ ▲ ▼ ▶ | You can select settings and switch screens by pressing the cursor keys indicating directions. |
| | ENTER mark | ↵ | Press [ENTER] to set the selected setting or execute the processing. |
| ③ | Present value | | The present value (before change) is displayed. |
| ④ | Setting value | | Select the setting you want to set (after change). |

# Object to Be Printed On

## Conditions for Settable Objects to Be Printed On

The conditions for objects to be printed on that can be set in the machine are shown below.

| | | |
|---|---|---|
| Maximum size | Width | 538 mm (21.2 in.) |
| | Length | 360 mm (14.2 in.) |
| | Thickness | 100 mm (3.94 in.) |
| Maximum weight | | 5 kg (11.0 lb.) |

**IMPORTANT**

- Do not use objects to print on that are charged with static electricity.
- This printer cannot print on all materials. When selecting the object to be printed on, be sure to carry out testing in advance to make sure that satisfactory print quality can be obtained.
- There is a limit to the variation in the unevenness on the print surface.
  P. 70 "Notes When the Print Surface Is Uneven"
- Depending on the type of object to print on and the installation method, the height may not be set correctly. The machine may malfunction if printing is performed when an incorrect installation method is used or if printing is performed on an inappropriate material. Do not use objects to print on that match the status or material shown below.

| | | |
|---|---|---|
| 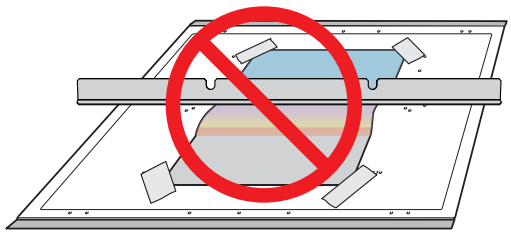 | Objects that easily become loose | If the object to be printed on is not firmly held in place, the head gap sensor cannot detect the height correctly. Be sure to secure the object to be printed on firmly in place. If the media becomes loose, you can use a substance such as commercially available adhesive tape to hold the media in place. |
| 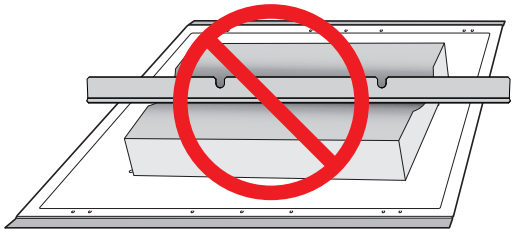 | Objects made from soft material | If the object to be printed on is made from soft material, the pressure it applies on the head gap sensor is too weak. This prevents its height from being detected correctly. |

## Printable Area

Maximum printable area: (①) 508 mm (20.0 in.) × (②) 330 mm (13.0 in.) × (③) 100 mm (3.9 in.) [W × L × D]

- The maximum printable area is the area inside the guide lines (④) on the flat table.
- The maximum size of the object to be printed on and the maximum printable area are different.

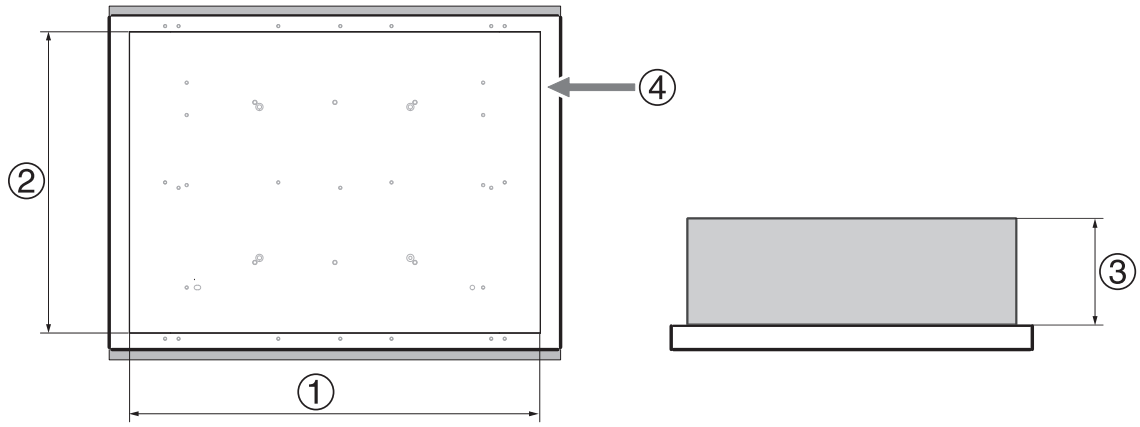

# Features of Inks

## Features of ECO-UV Inks

This printer uses ECO-UV inks. ECO-UV inks are fixed to the object to be printed on instantly by ultra-violet light. This makes it possible to perform printing on objects that are difficult to print on using conventional inks. ECO-UV inks are available in a lineup of six colors (cyan, magenta, yellow, black, white, and gloss).

## Features of Primer

The primer is a colorless and transparent coating agent used as an ink base. By using primer as a base, you can print on glass or other materials on which UV ink cannot be applied.

The primer may not be fully efficient on some materials. Be sure to perform test printing to check the effect.

# Menu List

## Main Menu

Press [MENU].

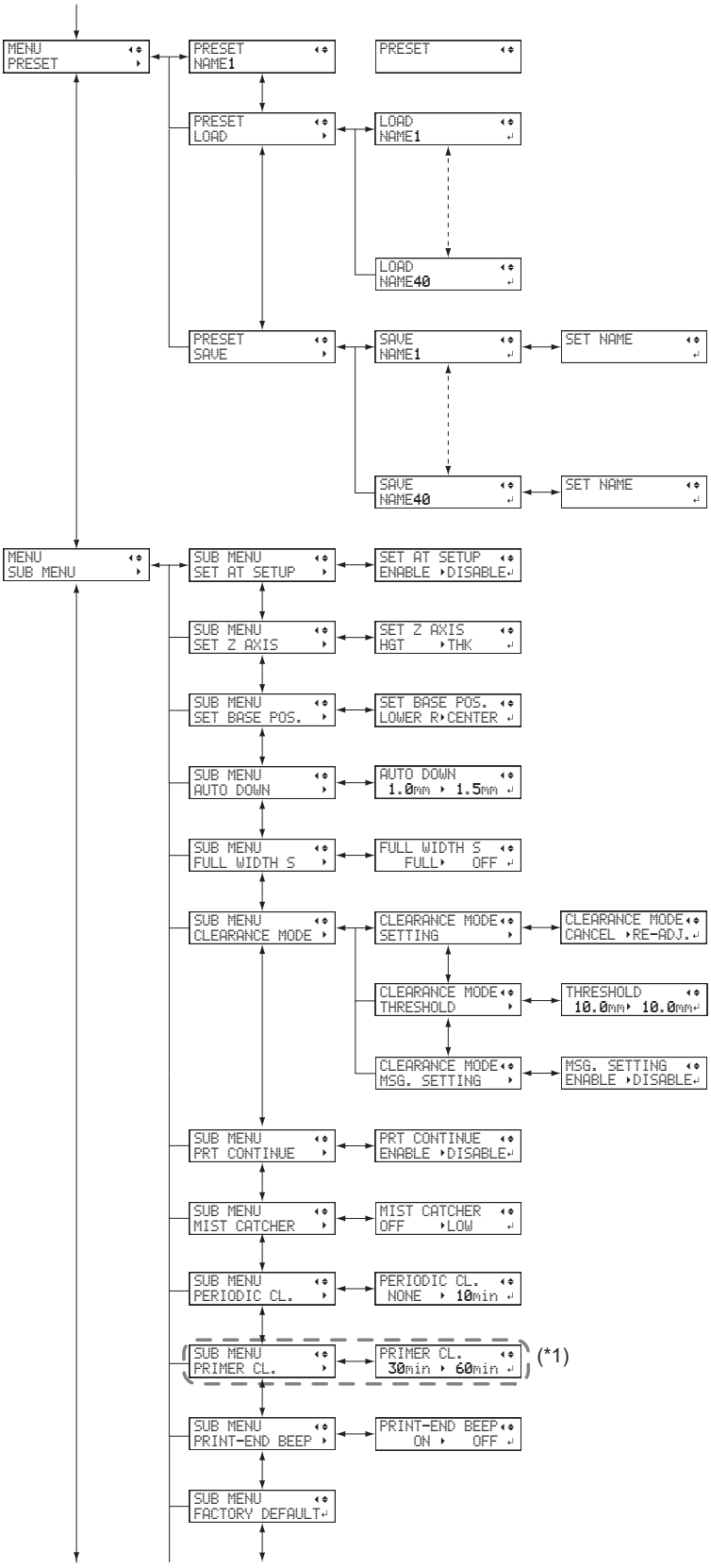

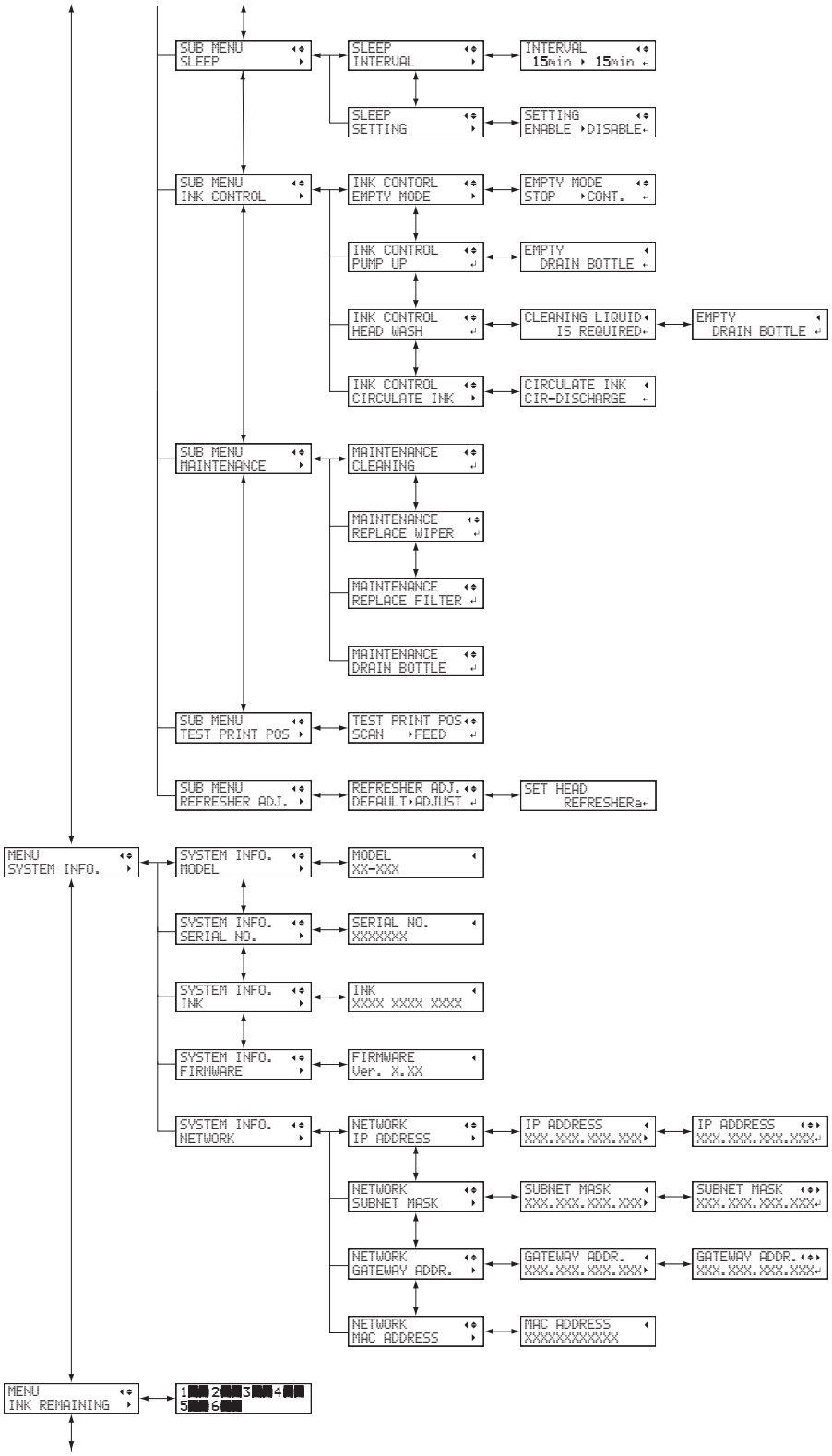
SUB MENU
SLEEP
SLEEP
INTERVAL
INTERVAL
15min ▸ 15min
SLEEP
SETTING
SETTING
ENABLE ▸DISABLE
SUB MENU
INK CONTROL
INK CONTORL
EMPTY MODE
EMPTY MODE
STOP ▸CONT.
INK CONTROL
PUMP UP
EMPTY
DRAIN BOTTLE
INK CONTROL
HEAD WASH
CLEANING LIQUID
IS REQUIRED
EMPTY
DRAIN BOTTLE
INK CONTROL
CIRCULATE INK
CIRCULATE INK
CIR-DISCHARGE
SUB MENU
MAINTENANCE
MAINTENANCE
CLEANING
MAINTENANCE
REPLACE WIPER
MAINTENANCE
REPLACE FILTER
MAINTENANCE
DRAIN BOTTLE
SUB MENU
TEST PRINT POS
TEST PRINT POS
SCAN ▸FEED
SUB MENU
REFRESHER ADJ.
REFRESHER ADJ.
DEFAULT▸ADJUST
SET HEAD
REFRESHERa
MENU
SYSTEM INFO.
SYSTEM INFO.
MODEL
MODEL
XX-XXX
SYSTEM INFO.
SERIAL NO.
SERIAL NO.
XXXXXXX
SYSTEM INFO.
INK
INK
XXXX XXXX XXXX
SYSTEM INFO.
FIRMWARE
FIRMWARE
Ver. X.XX
SYSTEM INFO.
NETWORK
NETWORK
IP ADDRESS
IP ADDRESS
XXX.XXX.XXX.XXX
IP ADDRESS
XXX.XXX.XXX.XXX
NETWORK
SUBNET MASK
SUBNET MASK
XXX.XXX.XXX.XXX
SUBNET MASK
XXX.XXX.XXX.XXX
NETWORK
GATEWAY ADDR.
GATEWAY ADDR.
XXX.XXX.XXX.XXX
GATEWAY ADDR.
XXX.XXX.XXX.XXX
NETWORK
MAC ADDRESS
MAC ADDRESS
XXXXXXXXXXXX
MENU
INK REMAINING
1 2 3 4
5 6

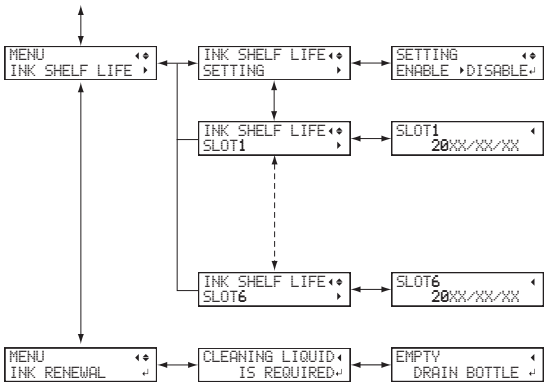


(*1) When using primer

## Function Menu

Press [FUNCTION].

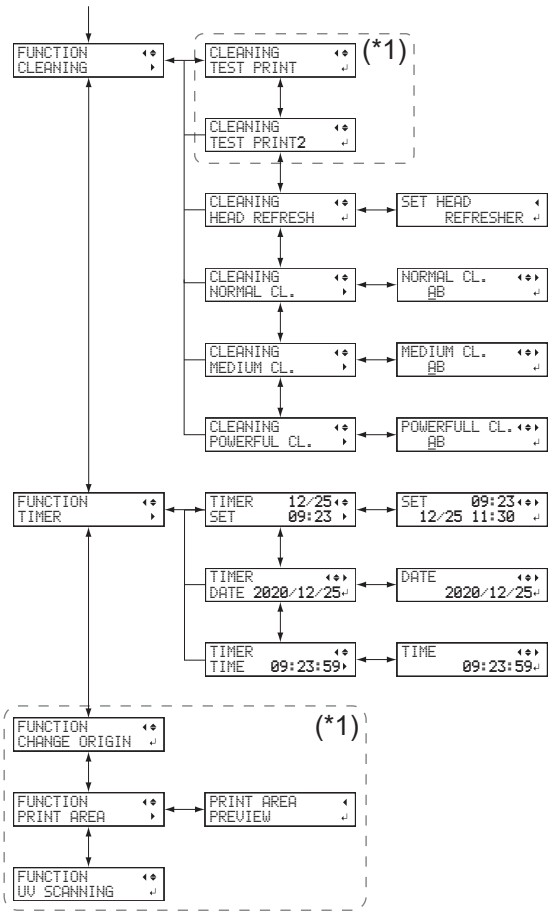


(*1) Not displayed if the setup of the object to be printed on is not completed (when [SETUP] is off or flashing).

## Language and Unit Menu

Hold down [MENU] and switch on the sub power.

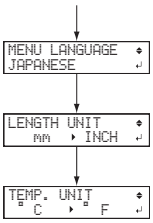

# Basic Operations

Power Supply Operations ..... 23
Turning the Power On ..... 23
Turning the Power Off ..... 24
Precautions When Operating the Power Supply ..... 25
Sleep Mode (Power-saving Feature) ..... 26
Checks before Operations ..... 27
LAN (Local Area Network) Settings ..... 27
Preparing the Cleaning Liquid for Head Refreshing ..... 28
Preventing Sedimentation in Inks ..... 30

# Power Supply Operations

## Turning the Power On

**Procedure**

1. **Close the front cover.**
2. **Turn on the main power switch.**
3. **Press the sub power button.**

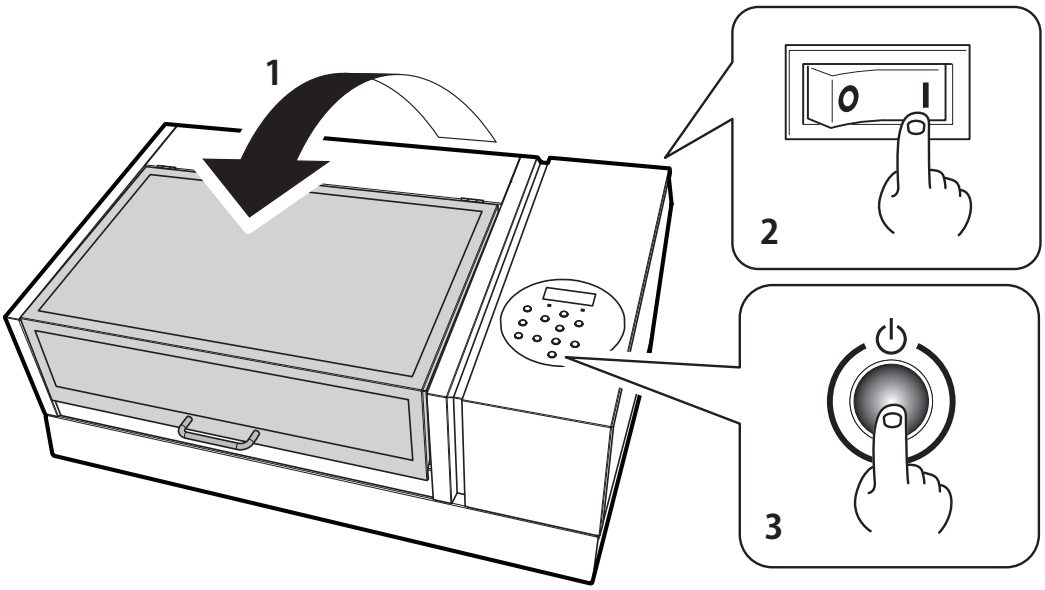


**IMPORTANT**

Be sure to hold the handle of the front cover and keep holding it until the cover is completely opened or closed. If you do not open and close the front cover gently, it may break or you may be injured.

## Turning the Power Off

**Procedure**

1. **Switch off the sub power whenever printing is finished.**

   The sub power switches off automatically. Turn off the sub power after printing is complete.

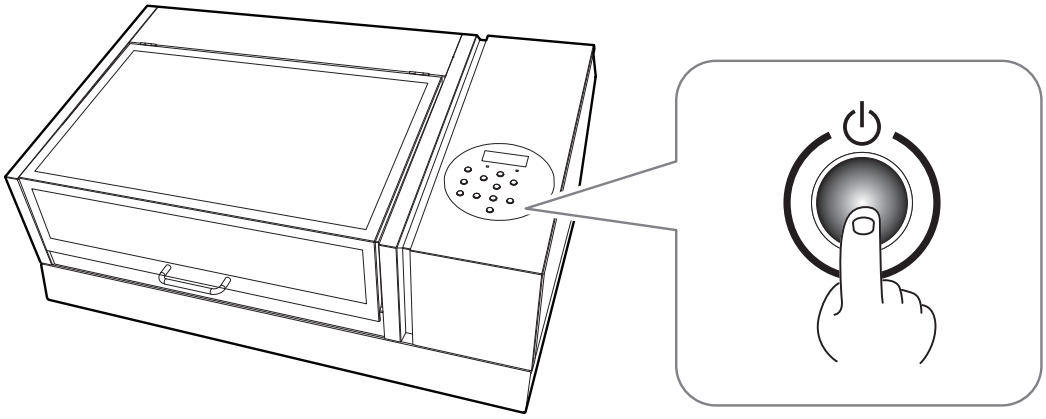

## Precautions When Operating the Power Supply

**IMPORTANT**

**Always keep the main power switched on.**

Never switch off the main power. Leaving the main power enables automatic maintenance to be carried out periodically. If the automatic maintenance is not carried out, it may result in the breakdown of this machine, such as the breakdown of the print heads.

**IMPORTANT**

**Never switch off the main power or unplug the power cord suddenly while operation is in progress.**

Switching off the main power or unplugging the power cord suddenly while operation is in progress may damage the print heads. Be sure to first switch off the sub power. If the main power is accidentally switched off, immediately turn the main power and sub power back on.

## Sleep Mode (Power-saving Feature)

This machine is provided with a power-saving feature that switches to a low-power "sleep mode" when a fixed interval passes with no operation. The factory default for the time after which the machine switches to sleep mode is 30 minutes. When the machine is in the sleep mode, the sub power switch flashes slowly. Using the operation panel or performing operations such as sending print data from the computer restores the machine to its normal mode.

This sleep mode setting can be changed. However, we recommend setting the activation time for sleep mode to 30 minutes or less to reduce power consumption and prevent problems such as overheating.

**RELATED LINKS**

- P. 107 "Setting the Activation Interval for Sleep Mode (Power-saving Feature)"

## LAN (Local Area Network) Settings

Check that you can perform communication through the LAN interface.

The LAN is enabled if the status LED (①) on the LAN connector located on the back of the printer is lit in green.

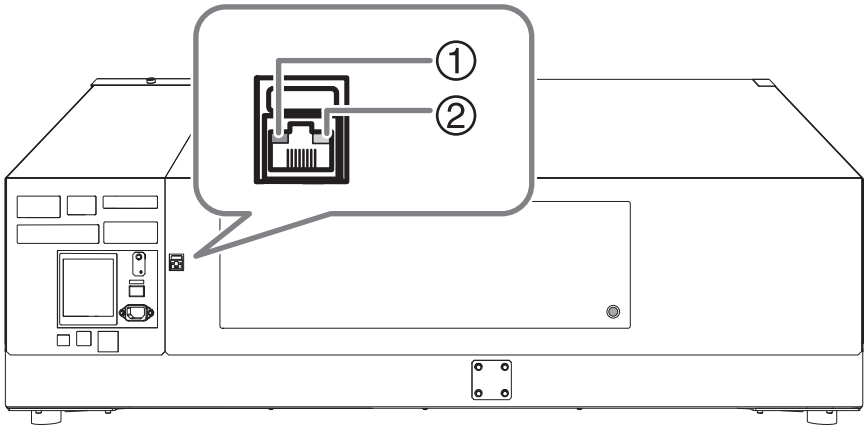


| | | |
|---|---|---|
| ① | Status LED | This indicates the status of the communication function. When it lights in green, communication is possible. |
| ② | Activity LED | This flashes yellow while data is being received from the network. |

## Preparing the Cleaning Liquid for Head Refreshing

**IMPORTANT**

- **Before performing this work, read the labels on the cleaning liquid for head refreshing bottle and on the bottle for head refreshing and follow the precautions listed there.**
- **Perform this work carefully so as to avoid spilling the cleaning liquid for head refreshing.**
- **Do not mistake the cleaning liquid used in manual cleaning and the cleaning liquid for head refreshing. "For Head Refresher" is written on the label of the cleaning liquid for head refreshing bottle.**

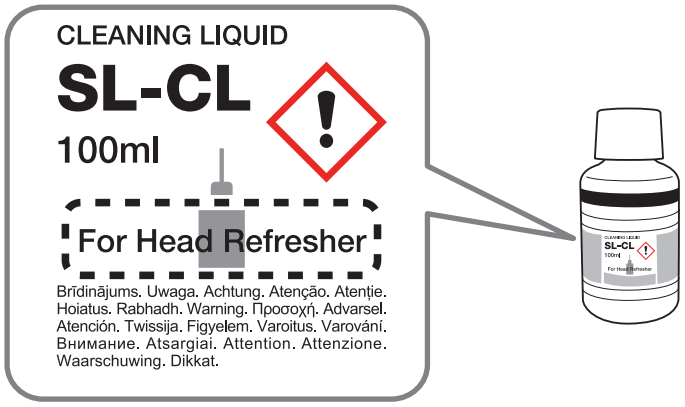


### Procedure

**1.** **Pour 20 to 30 ml of the cleaning liquid for head refreshing into the measuring cup.**

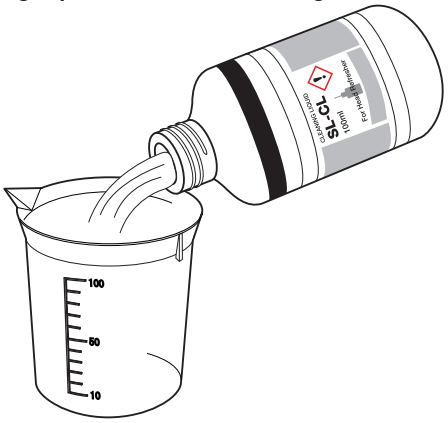


**IMPORTANT**

Quickly wipe away any spilled cleaning liquid.

**2.** **Attach the nozzle to the bottle for head refreshing and remove the cap from the nozzle.**

**3.** **Insert the cleaning liquid into the bottle.**

(1) **Squeeze the bottle and bring its nozzle into contact with the cleaning liquid poured into the cup.**

(2) **Wait until the cleaning liquid is suctioned into the bottle.**

Repeat these steps until there is no cleaning liquid in the cup.

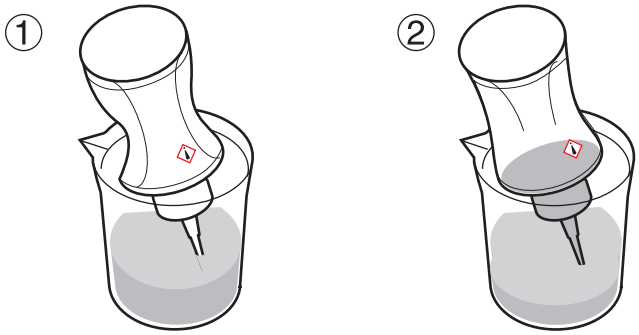


**IMPORTANT**

- Wipe away any cleaning liquid that adheres to the area around the bottle or the work table.
- Wipe away the small amount of cleaning liquid that remains in the cup, and then store it so that dust does not get inside.

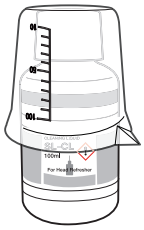

- Attach the cap to the bottle for head refreshing, and then store it.

## Preventing Sedimentation in Inks

The precipitation of the ingredients in the ink disables printing in normal color. So that the ink mixes well, shake the ink cartridge horizontally with a stroke length of around 5 cm (2 in.) from each end of the ink cartridge.

- Remove the white ink cartridge, shake it 50 times (about 20 seconds), and then reinsert this cartridge.
- The ink cartridges for colors other than white do not need to be shaken before every operation, but be sure to shake them when installing new ones.

The ingredients in white ink tend to settle. Each day, before starting the day's operations, be sure to shake this cartridge. Allowing the ink to stand without carrying out these steps can cause the settled material to harden, resulting in malfunction or other problems.

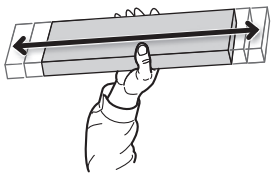

**IMPORTANT**

- Before shaking the ink cartridge, wipe off any ink from around its mouth. If you do not wipe off the ink, it may splatter when you shake the ink cartridge.
- When you have finished mixing the ink, reattach the ink cartridge immediately. Taking time to reattach the ink cartridge will adversely affect the ink path.
- Even if you are not using the printer, shake the white ink cartridge 50 times (about 20 seconds) once a week.

# Output Method

# Printing Operations

Printing method....33
Checking the Daily Workflow....33
Three Checks before Printing....35
Step 1: Preparing for the Start of Daily Operations....38
Step 2: Printing....49
Step 3: Head Refreshing after Daily Operations....57
Pausing and Canceling Printing....62
Pausing and Resuming Printing....62
Canceling Printing....62

# Printing method

## Checking the Daily Workflow

This section explains the basic workflow of daily operations.

Performing appropriate maintenance at the correct times can help prevent malfunction as well as bring out the full potential of this machine.

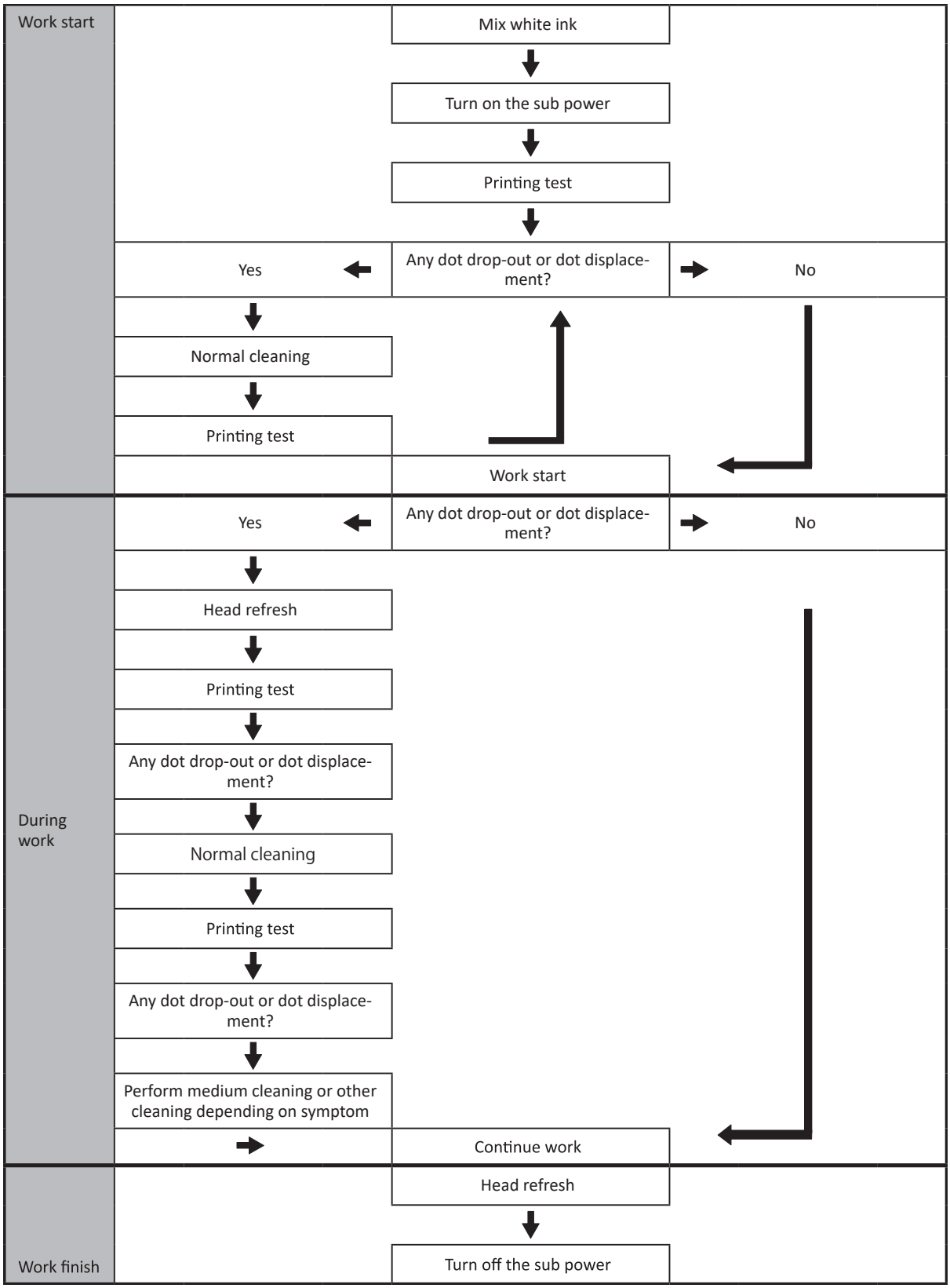
Work start
Mix white ink
Turn on the sub power
Printing test
Yes
Any dot drop-out or dot displace-ment?
No
Normal cleaning
Printing test
Work start
During work
Yes
Any dot drop-out or dot displace-ment?
No
Head refresh
Printing test
Any dot drop-out or dot displace-ment?
Normal cleaning
Printing test
Any dot drop-out or dot displace-ment?
Perform medium cleaning or other cleaning depending on symptom
Continue work
Work finish
Head refresh
Turn off the sub power

## Three Checks before Printing

On this machine, ink affixed on the surface of the print heads might be cured by the reflection of the UV-LED lamp light and by ink mist (ink splashing during printing). If ink affixed on the surface of the print heads is cured, dot drop-outs may occur. Continued use of the product in this state may cause a failure that requires the replacement of the print heads.

While daily cleaning is important to prevent dot drop-outs, there are also three important points to check before printing.

**1. Do not use objects that easily reflect light.**

Materials that are likely to reflect the UV-LED lamp light, such as mirrors and stainless steel, promote the curing of the surface of the print heads and therefore cannot be used as the object to be printed on.

**2. Shorten the distance to the print heads.**

As the distance between the print heads (①) and the surface of the object to be printed on (②) increases, the likelihood of ink mist increases. When setting the height of the object to be printed on manually, make the distance as short as possible. When the height (③) is automatically set, the distance is about 1 mm (39.4 mil).

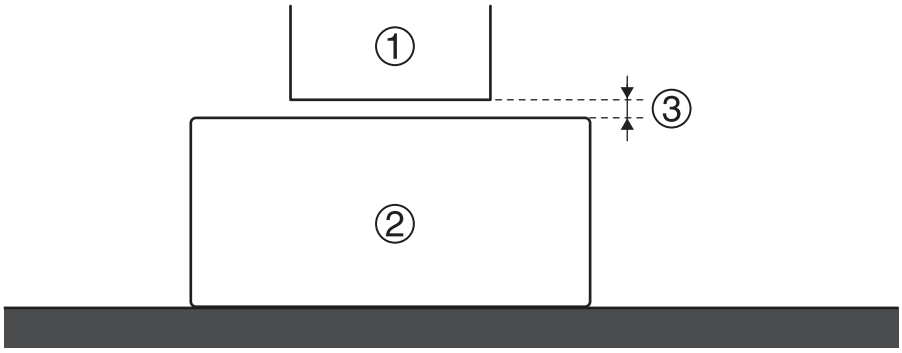


**3. Consider whether a jig is necessary.**

- As the distance between the object to be printed on and the print heads increases, the likelihood of ink mist increases. Therefore, a jig might be required according to the size and shape of the object to be printed on. Prepare a jig if one of the following conditions is met.
  - With just the object to be printed on, no margins can be obtained in the areas 40 mm (1.58 in.) to both the right and left of the portion (width) of the data to be printed.

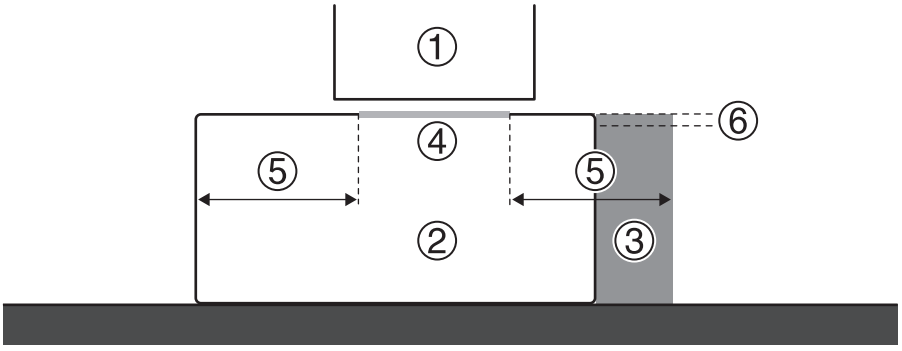


| | | | |
|---|---|---|---|
| ① | Print heads | ④ | Data area |
| ② | Object to be printed on | ⑤ | Margin: 40 mm (1.57 in.) or more |

| | | | |
|---|---|---|---|
| ③ | Jig | ⑥ | Less than 2 mm (78.7 mil) in height difference from the actual print surface |

- The variation in height of the surface of the object to be printed on is 2 mm (78.7 mil) or more.

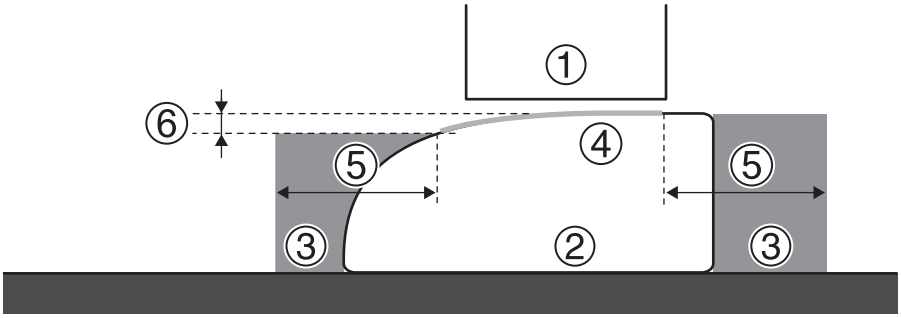


| | | | |
|---|---|---|---|
| ① | Print heads | ④ | Data area |
| ② | Object to be printed on | ⑤ | Margin: 40 mm (1.57 in.) or more |
| ③ | Jig | ⑥ | Less than 2 mm (78.7 mil) in height difference from the actual print surface |

- When considering a jig, also consider that a hole will be drilled in the jig and the head refresher will be attached on top of the jig. This affects the work efficiency of head refreshing and the print quality.

  Objects to be printed on with thickness up to 100 mm (3.9 in.) can be loaded. However, if the jig thickness is 55 mm (2.2 in.) or more, the installed height of the head refresher will exceed 100 mm (3.9 in.), which is outside the height adjustment range of the head refresher. In this situation, it is necessary to remove the jig before performing head refreshing.

  - Head refresher standard position

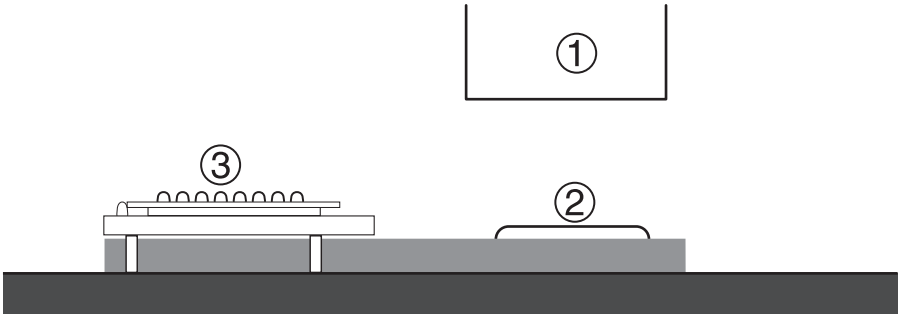


| | | | |
|---|---|---|---|
| ① | Print heads | ③ | Head refresher |
| ② | Object to be printed on | | |

  - Jigs for which head refreshing is possible with the jig installed

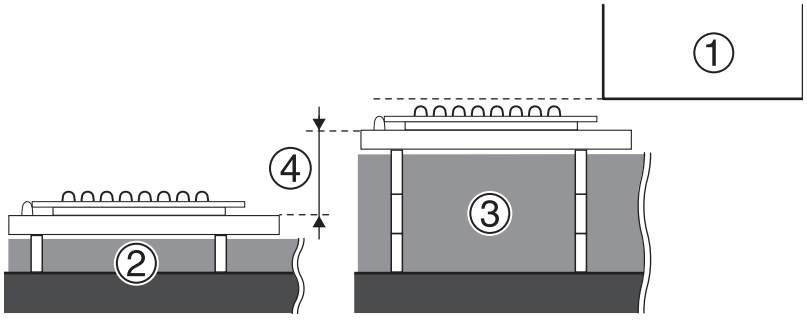

| | | | |
|---|---|---|---|
| ① | Print heads | ③ | Jig that can be used by changing the height of the head refresher |
| ② | Jig that can use the head refresher in the standard position | ④ | 55 mm (2.2 in.) or less |

- Jigs for which head refreshing is not possible with the jig installed

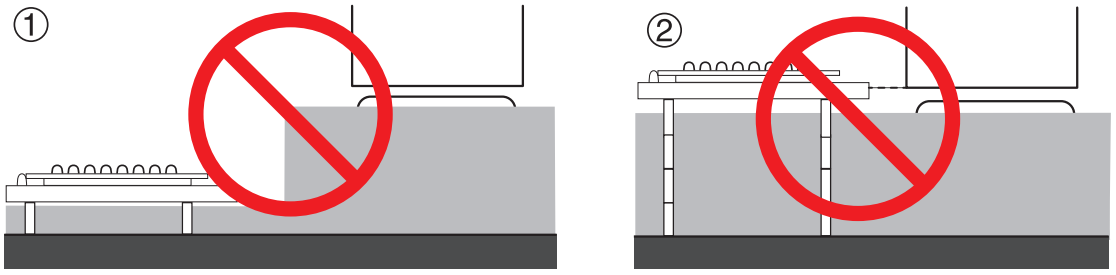


| | | | |
|---|---|---|---|
| ① | Jig that is taller than the head refresher | ② | Jig that makes the head refresher installation position 55 mm (2.2 in.) or more higher than the standard position |

**RELATED LINKS**

- P. 42 "The height of the object to be printed on is detected automatically."
- P. 65 "Setting the Height of the Object to Be Printed On Manually"
- P. 96 "Setting the Installation Height of the Head Refresher"

## Step 1: Preparing for the Start of Daily Operations

Perform a printing test to ensure no dot drop-out or dot displacement occurs. If dot drop-out or dot displacement occurs, clean the print heads (normal cleaning).

### 1. Turn on the sub power.

Turn on the sub power to begin the day's work. If using white ink, be sure to mix the ink in the cartridge first.

**Procedure**

1. **Open the front cover.**

   **IMPORTANT**

   Be sure to hold the handle of the front cover and open and close it gently.

2. **When using white ink, remove just the white ink cartridge and shake it 50 times (about 20 seconds).**

   So that the ink mixes well, shake the ink cartridge horizontally with a stroke length of around 5 cm (2 in.) from each end of the ink cartridge.

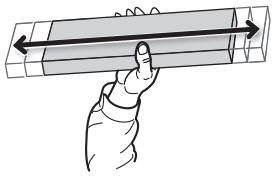

3. **Close the front cover.**

4. **Press the sub power button.**

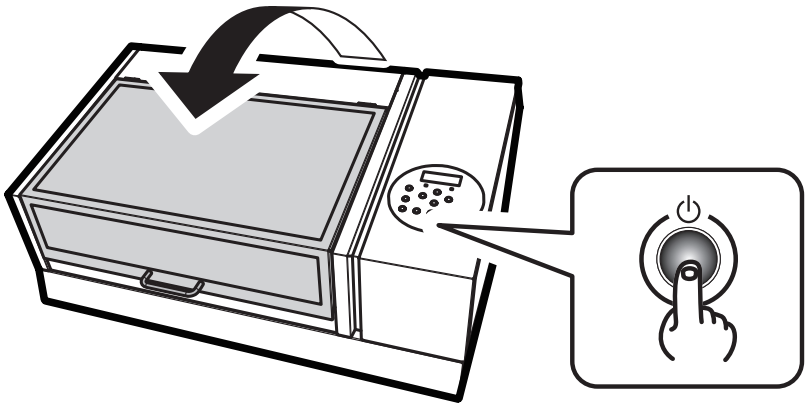

Initialization is complete when the following screen appears.

## 2. Set the machine so that the print area is set each time the media is set up.

Prevent printing in the incorrect position by specifying the print area each time before setting up the object to be printed on.

**MEMO**

To print in the same position repeatedly, specify "DISABLE" for this setting.

**Procedure**

1. **Press [MENU].**
2. **Press [▼] to display the screen shown below.**

3. **Press [▶] twice to display the screen shown below.**

4. **Press [▲] or [▼] to select "ENABLE".**

5. **Press [ENTER] to confirm your entry.**

## 3. Set the lower-right corner of the object to be printed on to the base printing position.

Set the base printing position (home position) at the front right of the print area. This method is appropriate when the print site is level, and you can clearly specify the print area.

Print area setup can be performed with the front cover open. However, if the front cover is left open for approximately 40 seconds, the print heads automatically return to the home position to prevent the print heads from drying out. The menu returns to the previous one. Repeat the procedure.

**Procedure**

1. **Press [◀].**
2. **Press [▼] twice, and then press [▶] once to display the screen shown below.**

   

3. **Press [▲] or [▼] to select "LOWER R".**
4. **Press [ENTER] to confirm your entry.**
5. **Press [MENU], then [◀] to go back to the original screen.**

## 4. Attach the object to be printed on for the printing test.

Attach the object to be printed on for the printing test. Use paper for testing (width 90 mm (3.54 in.) × length 70 mm (2.76 in.) or more), not the object that will actually be printed on.

**Procedure**

**1.** **Check that the following screen is displayed.**

If this screen is not displayed, check that nothing has been placed on top of the flat table, and then hold down [SETUP] for 1 second or more.

[SETUP] turns off, and the flat table comes forward.

The above screen appears, and the object to be printed on can be set up.

**2.** **Open the front cover.**

**IMPORTANT**

Be sure to hold the handle of the front cover and open and close it gently.

**3.** **Secure the paper for the printing test.**

Printing tests are used to check that no dot drop-out occurs. Use paper for testing (width 90 mm (3.54 in.) × length 70 mm (2.76 in.) or more), not the object that will actually be printed on.

**MEMO**

There are two types of printing tests. Select the paper to be used based on the features of the given type.

| Type | Features |
|---|---|
| | It is difficult to check the white ink if the paper for use in the printing test is white. We recommend printing on transparent paper. |
| | Because white ink is printed on a black undercoat, white ink can be easily checked even when printed on white paper. However, printing takes longer than "TEST PRINT". |

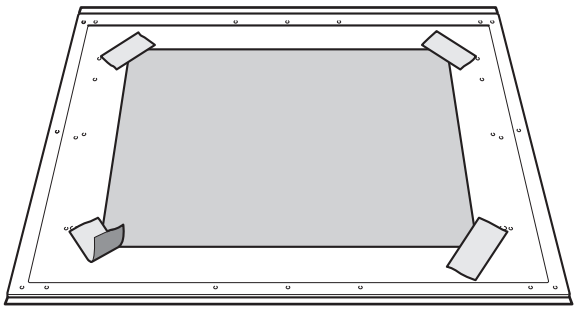

**MEMO**

**Secure the media with tape.**

Secure the media in place using a substance such as commercially available tape affixed directly to the flat table. This method can be used for thin paper and other such media that can be secured with tape only. It can be set anywhere as long as it does not protrude from the top of the flat table. Be aware that folds or kinks in the paper might hit the interior of the printer and cause damage.

**4.** **Close the front cover.**

## 5. The height of the object to be printed on is detected automatically.

The height of the object to be printed on is automatically detected, and the print heads are adjusted to the appropriate height for printing.

**Procedure**

1. **Press [SETUP].**

   [SETUP] starts to flash.

2. **Open the front cover.**

3. **Press [▲], [▼], [UP] or [DOWN] to move the flat table, bringing the highest position of the print surface into contact with the head gap sensor.**

   When the head gap sensor reacts, a buzzer goes off.

   To fine-tune the height, open the front cover and make the adjustments from a close distance.

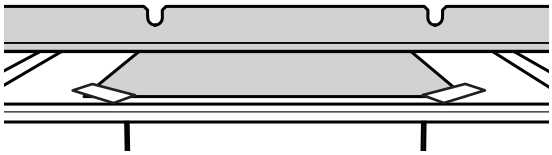

4. **Press [▶] to display the screen shown below.**

5. **Close the front cover.**

   **IMPORTANT**

   The following step moves the flat table rearward. If the object to be printed on hits the head gap sensor forcefully, the object to be printed on may be damaged or the head gap sensor may malfunction.

   To re-adjust the height of the object to be printed on, press [◀] and redo the procedure from step 2.

6. **Press [ENTER].**

   The flat table moves and the height of the object to be printed on is detected. The flat table rises while moving backward and forward until the object to be printed on reaches a position where it comes in contact with the head gap sensor.

   When the flat table stops moving and one short beep is heard, the setup is complete.

   The height of the object to be printed on will be set automatically to a position about 1 mm (39.4 mil) away from the print head's ink emission surface.

   **MEMO**

   You can change the distance between the ink emission surface of the print heads and the object to be printed on.

**RELATED LINKS**

• P. 67 "Adjusting the Distance between the Object to Be Printed On and the Print Heads"

## 6. Set the print area.

Set the print area for the printing test. For a printing test, set the print area with a "WIDTH" of 90 mm (3.5 in.) or more and a "LENGTH" of 70 mm (2.8 in.) or more. An error will occur and printing tests cannot be performed if the area is smaller than this.

**Procedure**

1. **Press [▲], [▼], [▶] or [◀] when the following screen appears.**

```
SCAN:     0.0mm
FEED:     0.0mm ↵
```

The flat table and the print heads move so that the pointer points at the previously set printing base position.

2. **Press [▲], [▼], [▶] or [◀] to move the pointer until it points to a position in the right foreground of the print area.**

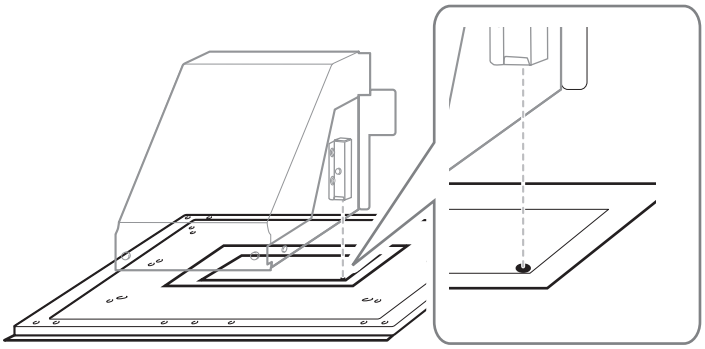

3. **Press [ENTER].**

The print heads return to the home position and the following screen is displayed.

```
WIDTH: XXX.Xmm
LENGTH:XXX.Xmm ↵
```

**MEMO**

- The previously set values are displayed for "WIDTH" and "LENGTH".
- When the object to be printed on comes into contact with the head gap sensor, the setup is canceled and the screen shown below appears. Redo from "5. The height of the object to be printed on is detected automatically.(P. 42)" .

```
CHECK TABLE
       HEIGHT ↵
```

When "CLEARANCE MODE" is set to "RE-ADJ", the setup is not canceled and operation continues.

4. **Press [▲], [▼], [▶] or [◀] to set the "WIDTH" to 90 mm (3.5 in.) or more and the "LENGTH" to 70 mm (2.8 in.) or more.**

The pointer moves until it points to a position in the inner left of the print area.

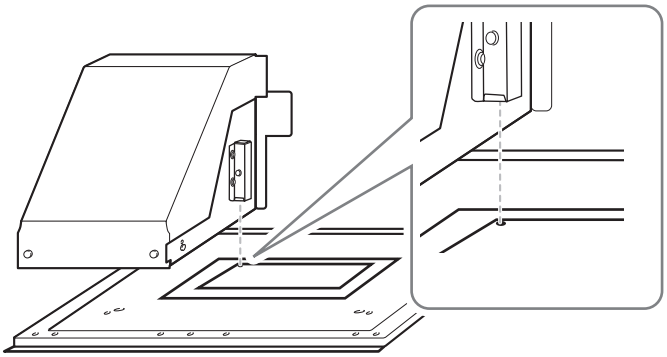

**5.** **Close the front cover when it is open.**

**6.** **Press [ENTER].**

The print area is specified. Print heads return to the standby position.

**7.** **Make sure the "W" ("WIDTH"), "L" ("LENGTH"), and "H" ("HEIGHT") values on the menu screen are as intended.**

**MEMO**

- If you want to use the print area specified here for the next printing operation, switch "SET AT SETUP" to "DISABLE". With this setting, you can set up the object to be printed on without setting the print area and base position.
  P. 91 "Omitting the Setting of the Print Area"
- Automatic return is not possible for a set base printing position (home position). In other words, the setting must be configured again if the base printing position (home position) differs, such as when selecting a new object to be printed on.

## 7. Perform a printing test.

Before you carry out actual printing, perform a printing test to ensure no dot drop-out or dot displacement occurs.

**Procedure**

1. **Before the start of daily operations, remove just the white ink cartridge, shake it 50 times (about 20 seconds), and then reinsert it.**

   So that the ink mixes well, shake the ink cartridge horizontally with a stroke length of around 5 cm (2 in.) from each end of the ink cartridge.

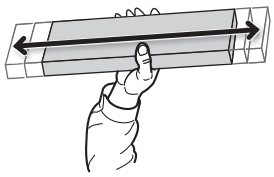

**IMPORTANT**

The ingredients in white ink tend to settle. The precipitation of the ingredients in the ink disables printing in normal color. Allowing the ink to stand without carrying out these steps can cause the settled material to harden, resulting in malfunction or other problems.

2. **Press [FUNCTION].**

3. **Display the printing test menu.**

   - "TEST PRINT"

     Press [▶] to display the screen shown below.

     It is difficult to check the white ink if the paper for use in the printing test is white. We recommend printing on transparent paper.

     ```
     CLEANING
     TEST PRINT
     ```

   - "TEST PRINT2"

     Press [▶], then [▼] to display the screen shown below.

     Because white ink is printed on a black undercoat, white ink can be easily checked even when printed on white paper. However, printing takes longer than "TEST PRINT".

     ```
     CLEANING
     TEST PRINT2
     ```

4. **Press [ENTER].**

   Printing of the test pattern starts.

5. **Check whether there is dot drop-out or dot displacement in the test pattern.**

   Missing blocks indicate dot drop-out. Collapsed or inclined blocks indicate dot displacement.

   The following figure shows the "TEST PRINT2" test pattern.

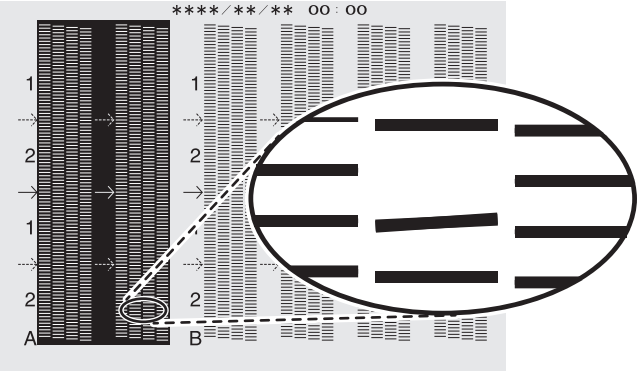


**6.** **If you have opened the front cover, close it.**

If no dot drop-out or dot displacement occurs, this operation is finished. Press [FUNCTION] to go back to the original screen.

**MEMO**

When performing printing tests successively, you can select "FEED" (vertical printing) or "SCAN" (horizontal printing) as the print position for the second and later tests in comparison to the first test.

**RELATED LINKS**

- P. 95 "Performing Printing Tests Arranged Horizontally"

## 8. Performing Normal Cleaning

If, after viewing the results of the printing test, dot drop-out or dot displacement is still present, perform normal cleaning.

**Procedure**

**1. Press [▼] several times to display the screen shown below.**

**2. Check for the group with dot drop-out or dot displacement by viewing the results of the printing test.**

Missing blocks indicate dot drop-out. Collapsed or inclined blocks indicate dot displacement.

The space from "A" to "B" is group A. The space from "B" to the right side is group B.

The following figure shows the "TEST PRINT2" test pattern.

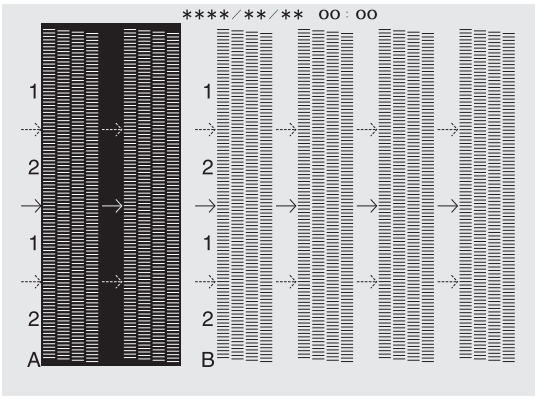


**MEMO**

If the printing-test results are difficult to interpret

Check the results in a bright location, changing your line of vision. They are visible using the reflection of the light.

**3. Press [▶].**

**4. Select the group of print heads to clean.**

(1) **Press [◀] or [▶] to select the group of print heads that is not to be cleaned.**

(2) **Press [▲] or [▼] to get rid of the group display.**

(3) **Repeat steps 1 and 2 to display only the group of print heads that requires cleaning.**

Only the displayed groups will be cleaned. If "AB" is displayed, both groups will be cleaned.

**5. Press [ENTER].**

The screen shown below appears, and then cleaning starts. The (approximate) remaining time for the procedure is displayed on the screen. (The display shown below is an example. "01:45" = "1 minute and 45 seconds")

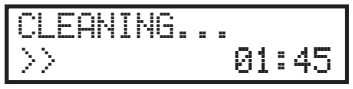


When finished, the screen shown below appears again.

**6.** **Press [◀].**

**7.** **Display the printing test menu.**

- "TEST PRINT"

  Press [▶] to display the screen shown below.

  It is difficult to check the white ink if the paper for use in the printing test is white. We recommend printing on transparent paper.

- "TEST PRINT2"

  Press [▶], then [▼] to display the screen shown below.

  Because white ink is printed on a black undercoat, white ink can be easily checked even when printed on white paper. However, printing takes longer than "TEST PRINT".

**8.** **Press [ENTER].**

Printing of the test pattern starts.

**9.** **Check to make sure the dot drop-out or dot displacement has been corrected.**

If the problem persists, try performing normal cleaning again. If the printer has been used for a long period, dot drop-outs may not be fixed even after performing normal cleaning two or three times. If this is the case, clean using a different method.

**IMPORTANT**

UV ink will harden. It may adhere to the print head and solidify. If left alone, ink may clog the print heads and cause problems including printer malfunctions. Clean the head manually when printing frequently with the print head at a distance from the print surface. This is called manual cleaning. To prevent clogging of the print heads, you may have to perform manual cleaning each time you print in some cases.

**RELATED LINKS**


- P. 151 "When Normal Cleaning Is Not Effective"
- P. 157 "Manual Cleaning"

## Step 2: Printing

### 1. Attach the object to be printed on.

**MEMO**

This section assumes that you are printing for the first time or immediately after changing the object to be printed on. Therefore, "SET AT SETUP" is set to "ENABLE". When repeatedly printing in the same position on objects to be printed on that have the same shape, we recommend that you set "SET AT SETUP" to "DISABLE".

P. 91 "Omitting the Setting of the Print Area"

**Procedure**

**1.** **Check that the following screen is displayed.**

If this screen is not displayed, check that nothing has been placed on top of the flat table, and then hold down [SETUP] for 1 second or more.

[SETUP] turns off, and the flat table comes forward.

The above screen appears, and the object to be printed on can be set up.

**2.** **Open the front cover.**

**IMPORTANT**

Be sure to hold the handle of the front cover and open and close it gently.

**3.** **Secure the object to be printed on.**

A jig might be required according to the shape of the object to be printed on.

The following figure shows an example of using jigs to fit the shape of the object to be printed on. The jigs are secured by double-sided tape attached to the bottom side.

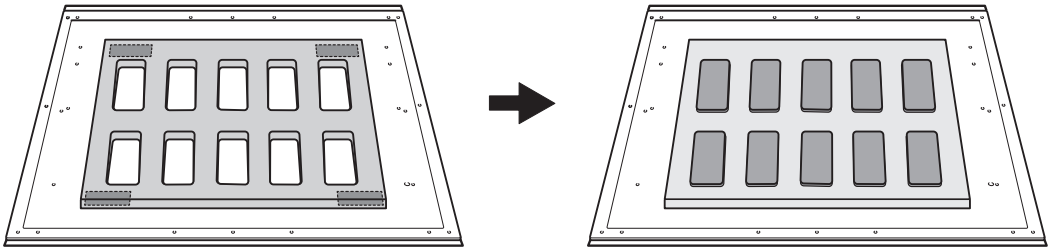

**RELATED LINKS**

- P. 35 "Three Checks before Printing"

## 2. The height of the object to be printed on is detected automatically.

The height of the object to be printed on is automatically detected, and the print heads are adjusted to the appropriate height for printing.

**Procedure**

1. **Press [SETUP].**

   [SETUP] starts to flash, and then the following screen appears.

   "XXX.X" indicates the height detected last time.

   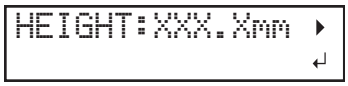
   

2. **Press [▲], [▼], [UP] or [DOWN] to move the flat table, bringing the highest position of the print surface into contact with the head gap sensor.**

   When the head gap sensor reacts, a buzzer goes off.

   To fine-tune the height, open the front cover and make the adjustments from a close distance.

   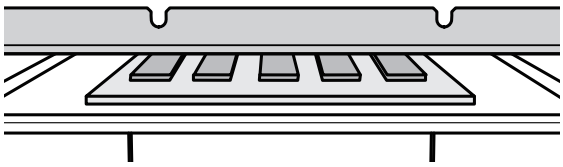

3. **Press [▶] to display the screen shown below.**

   

4. **Close the front cover.**

   **IMPORTANT**

   The following step moves the flat table rearward. If the object to be printed on hits the head gap sensor forcefully, the object to be printed on may be damaged or the head gap sensor may malfunction.

   To re-adjust the height of the object to be printed on, press [◀] and redo the procedure from step 2.

5. **Press [ENTER].**

   The flat table moves and the height of the object to be printed on is detected. The flat table rises while moving backward and forward until the object to be printed on reaches a position where it comes in contact with the head gap sensor.

   When the flat table stops moving and one short beep is heard, the setup is complete.

   The height of the object to be printed on will be set automatically to a position about 1 mm (39.4 mil) away from the print head's ink emission surface.

   **MEMO**

   You can change the distance between the ink emission surface of the print heads and the object to be printed on.

**RELATED LINKS**


- P. 67 "Adjusting the Distance between the Object to Be Printed On and the Print Heads"

## 3. Set the print area.

**Procedure**

**1. Press [▲], [▼], [▶] or [◀] when the following screen appears.**

```
SCAN:     0.0mm
FEED:     0.0mm ↵
```

The flat table and the print heads move so that the pointer points at the previously set printing base position.

**2. Press [▲], [▼], [▶] or [◀] to move the pointer until it points to a position in the right foreground of the print area.**

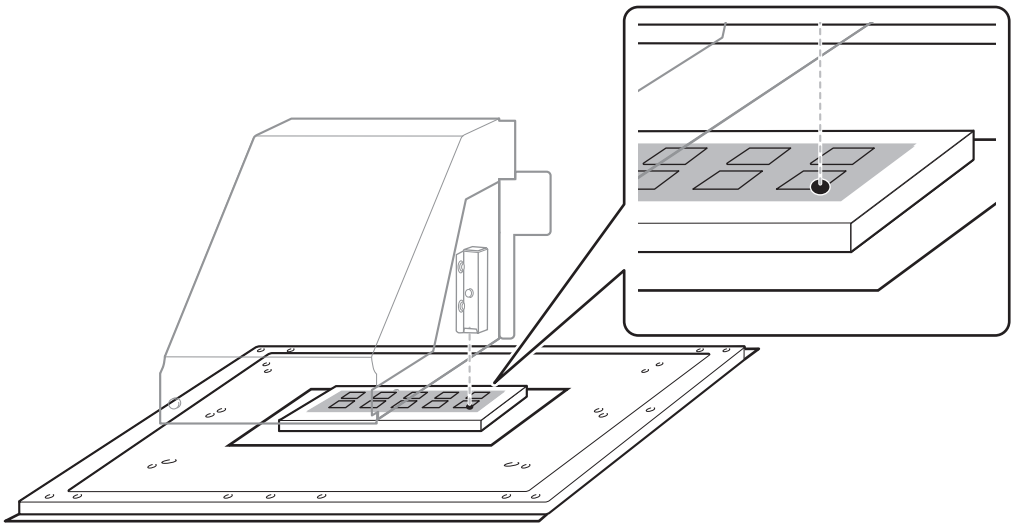

MEMO

**When the pointer is difficult to see**

Depending on the material of the object to be printed on, such as transparent media or high-gloss media with dark colors used on the print surface, the pointer may be difficult to see. In such cases, the pointer may become more visible by placing masking tape on the print surface or on the back.

**3. Press [ENTER].**

The print heads return to the home position and the following screen is displayed.

```
WIDTH: XXX.Xmm
LENGTH:XXX.Xmm ↵
```

MEMO

- The previously set values are displayed for "WIDTH" and "LENGTH".
- When the object to be printed on comes into contact with the head gap sensor, the setup is canceled and the screen shown below appears. Redo from "2. The height of the object to be printed on is detected automatically.(P. 50)" .

```
CHECK TABLE
      HEIGHT ↵
```

When "CLEARANCE MODE" is set to "RE-ADJ", the setup is not canceled and operation continues.

**4. Press [▲], [▼], [▶] or [◀] to set "WIDTH" and "LENGTH" to values that match the size of the print area.**

The pointer moves until it points to a position in the inner left of the print area.

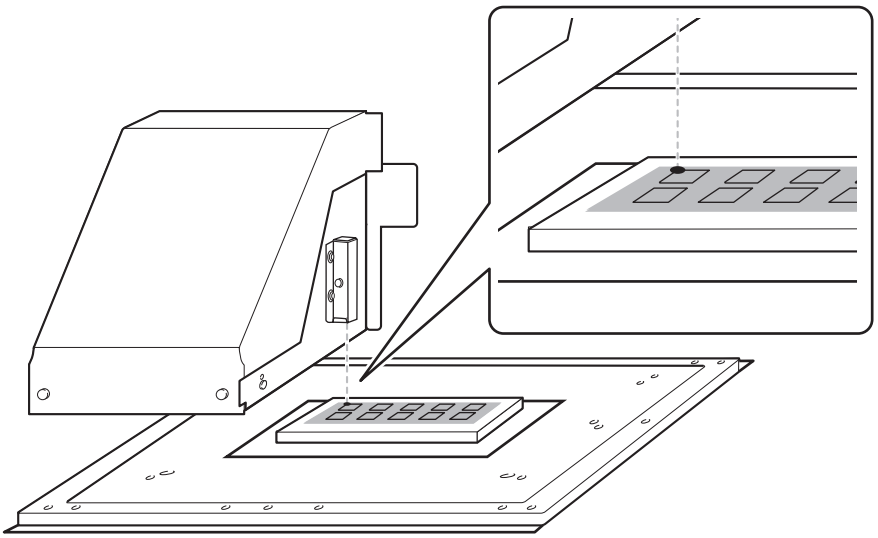

**5.** **Close the front cover when it is open.**

**6.** **Press [ENTER].**

The print area is specified. Print heads return to the standby position.

**7.** **Make sure the "W" ("WIDTH"), "L" ("LENGTH"), and "H" ("HEIGHT") values on the menu screen are as intended.**

```
W:508mm L:330mm
H:100.0mm
```

MEMO

- If you want to use the print area specified here for the next printing operation, switch "SET AT SETUP" to "DISABLE". With this setting, you can set up the object to be printed on without setting the print area and base position.
  P. 91 "Omitting the Setting of the Print Area"
- Automatic return is not possible for a set base printing position (home position). In other words, the setting must be configured again if the base printing position (home position) differs, such as when selecting a new object to be printed on.

## 4. Load the print area into VersaWorks.

**Procedure**

1. **Start VersaWorks.**
2. **Check that:**
   - VersaWorks Dual connects to the machine.
   - The machine's status is **[Ready to Start Printing]**.
3. **Click** ⚙ **for the queue folder that you want to use.**

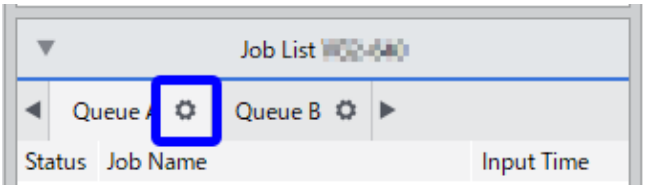


The **[Queue Properties]** window appears.

4. **Click [Get Media Width].**

The set print area is obtained from the printer and set here.

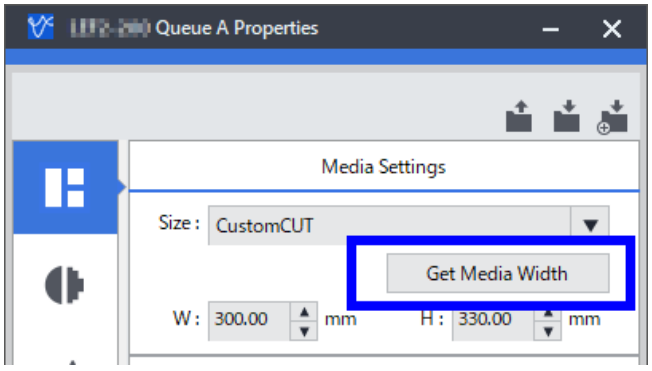


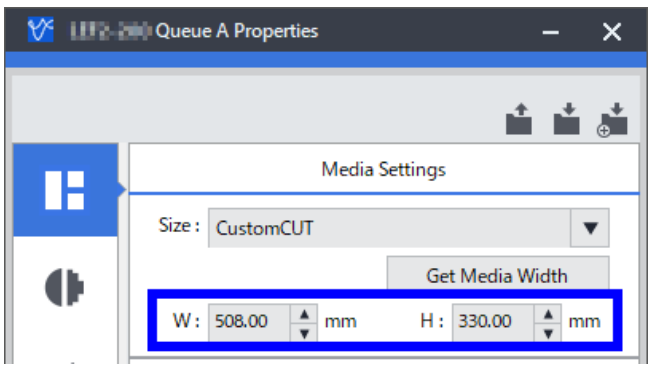


For other VersaWorks settings, see the VersaWorks manual.

5. **Click [OK].**

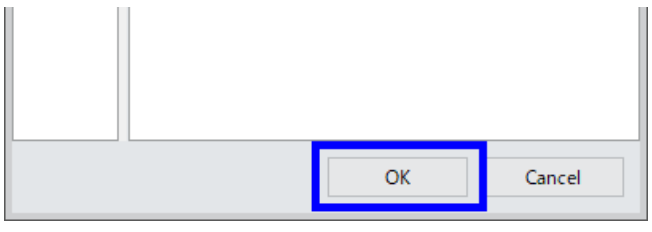

**RELATED LINKS**

- VersaWorks User's Manual (https://downloadcenter.rolanddg.com/VersaWorks6)

## 5. Perform printing.

### Procedure

**1.** **Click [File]>[Add Job to Queue Folder] to select the queue folder to use.**

The file opening screen is displayed.

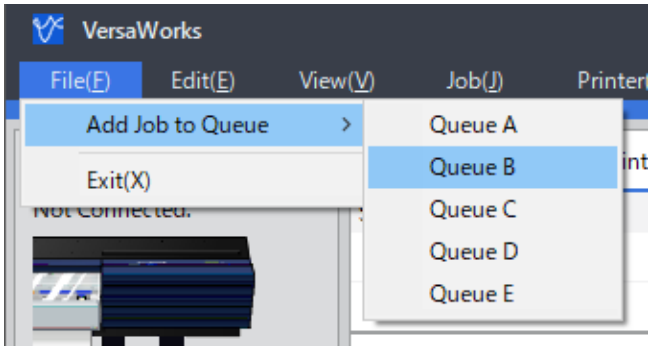


**2.** **Select the printing data to add to the job list, and then click [Open].**

The selected data is displayed in the job list. To add more jobs, repeat step 1, 2.

MEMO

You can add jobs to the job list directly by dragging the icon for the printing data to the queue folder's job list.

**3.** **In the job list, double-click the job whose print settings you want to change.**

The job settings screen is displayed. Use this screen to fit the print data in the print area and adjust its position. The white part in the layout area is the loaded print area. The portion that is not in the print area will not be printed.

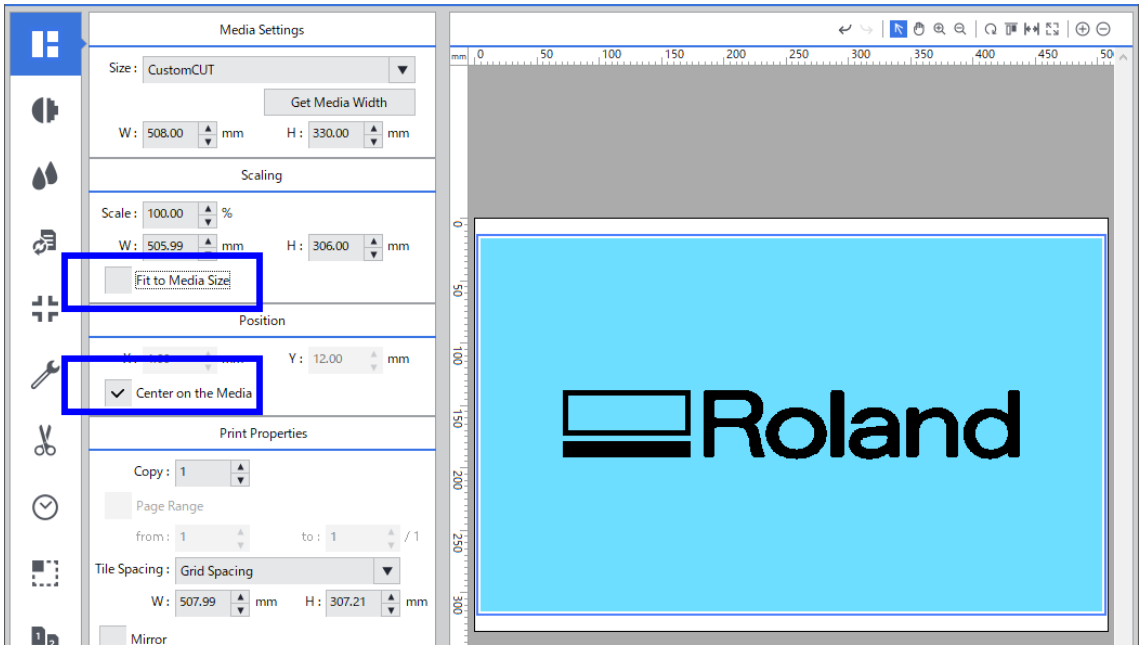


MEMO

- **[Fit to Media Size]**: The print data is adjusted to match the print area.
- **[Center on the Media]**: The print data is placed in the center of the print area.

MEMO

The orientation displayed on the VersaWorks screen is the opposite of the actual print orientation. Make sure the orientation of the object to be printed on is correct.

| Display on the VersaWorks screen | Actual print orientation |
|---|---|
| 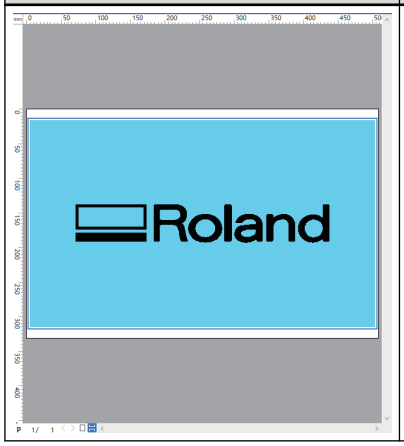 | 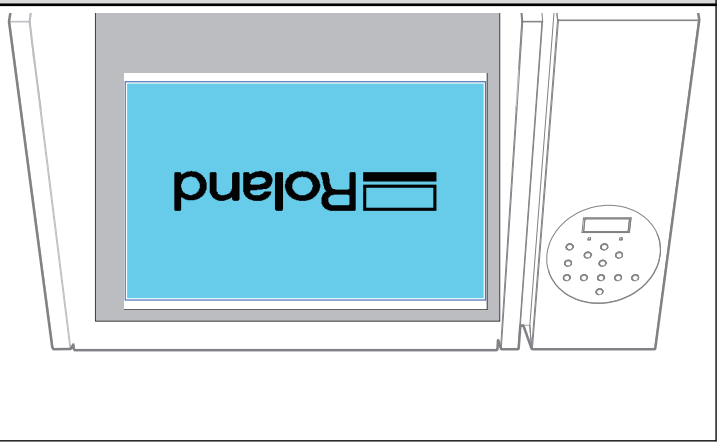 |

**4.** **When the printing position is adjusted, click [OK].**

**5.** **Click** **.**

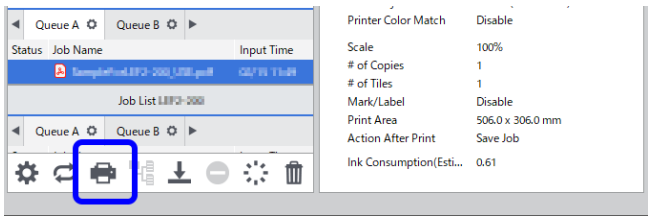


Printing starts.

When the printing ends, the screen shown below appears on the display screen of the printer.

```
FINISHED PRINT
                ↵
```

When this screen is displayed, no data is accepted from the computer.

**MEMO**

If "PRT CONTINUE" is set to "ENABLE", the screen shown in the figure does not appear.

**6.** **Press [ENTER].**

The screen shown below appears once more, and data from the computer can be accepted again.

```
W:508mm L:330mm
H:100.0mm
```

## Step 3: Head Refreshing after Daily Operations

Head refreshing is an important operation that prevents clogging of the print heads.

Refresh the heads:

- After daily operations.
- When the message "DO HEAD REFRESH" appears.
- When dot drop-out or dot displacement occurs.
- When an emergency stop occurs.
- When switching on the main power and sub power after the main power was previously switched off.

| Required items | | |
|---|---|---|
| 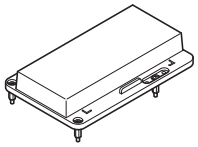 | 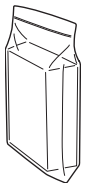 | 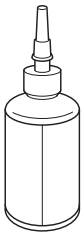 |
| Head refresher | Head cleaning sheet | Cleaning liquid for head refreshing |

**MEMO**

Transfer the cleaning liquid for head refreshing to the bottle for head refreshing.

P. 28 "Preparing the Cleaning Liquid for Head Refreshing"

**IMPORTANT**

Continue using the same head refresher with a single machine. Using a head refresher with multiple machines may lead to print head malfunctions.

**IMPORTANT**

Be sure to hold the handle of the front cover and open and close it gently.

### Procedure

1. **If [SETUP] is lit, hold down [SETUP] for 1 second or more to cancel setup.**

   [SETUP] turns off, and the flat table comes forward.

2. **If the following message is displayed, press [ENTER].**

   If this message is not displayed, start from step 5.

   

3. **Press [◀] or [▶] to select "YES".**

   

   **MEMO**

   Selecting "NO" returns the display to the top menu (or initiates automatic cleaning, depending on the printer status). However, the same message will be displayed once a certain amount of time has passed and in specific situations (such as before the start of manual cleaning and during wiper replacement). Head refreshing is an important operation that keeps the print heads in good condition. Perform this operation with as close to the appropriate timing as possible.

4. **Press [ENTER].**

   Proceed to step 8.

**5.** **Press [FUNCTION].**

**6.** **Press [▶] to display the screen shown below.**

**7.** **Press [ENTER].**

**8.** **When the following screen is displayed, open the front cover.**

**9.** **Check that nothing has been placed on top of the flat table.**

Remove any objects to be printed on and jigs that are present.

**10.** **Attach the head refresher to the flat table in the prescribed location.**

**IMPORTANT**

Be sure to attach the head refresher in this position. Attaching it in the incorrect position may lead to malfunctions caused by the head refresher hitting the print heads.

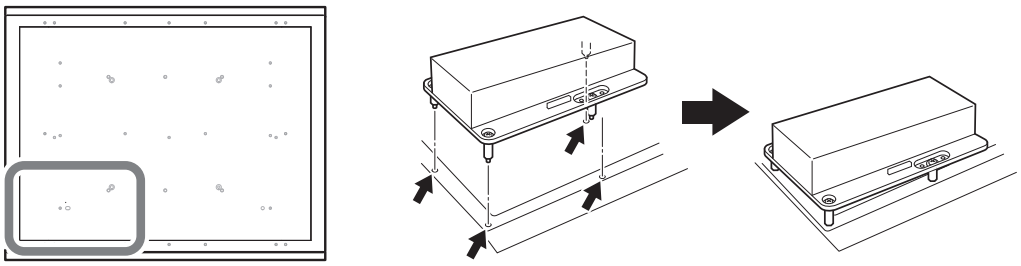

**11.** **Remove the head refresher cover.**

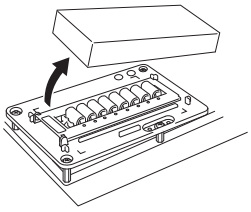

**IMPORTANT**

**Do not place the cover on the flat table.**

The cover being pinched between the head refresher and a part of the machine may lead to malfunctions. To avoid the risk of malfunctions, do not place the cover on the flat table.

**12.** **Attach the head cleaning sheet to the head refresher.**

(1) **Open the sheet retaining cover.**

(2) **Place the head cleaning sheet on the wiping part of the head refresher.**

Place the sheet so that it is aligned with the front position aligning tab (A) and its corners are inside the L-shaped marks.

(3) **Close the sheet retaining cover to secure the head cleaning sheet in place.**

Secure the sheet to prevent it from loosening.

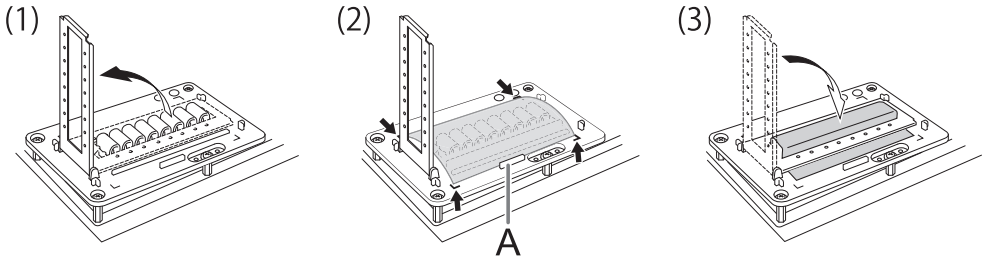


**Point**

To use the head refreshing function to its full effect, make sure that the head cleaning sheet is firmly fixed in place, with no slack. Failing to secure the sheet sufficiently will not only prevent you from obtaining the full effect of head refreshing but may also lead to print head malfunctions.

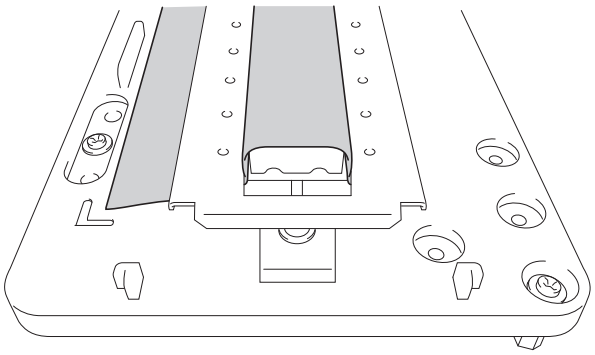

**13.** **Press [ENTER].**

**14.** **When the following screen is displayed, apply head refreshing cleaning liquid to the head cleaning sheet.**

**Point**

- As a guideline, apply 2 drops of cleaning liquid to a single cleaning pad. Apply 1 drop of cleaning liquid in each location, using the holes in the sheet retaining cover (8 holes in the front and 8 holes in the back for a total of 16 holes) as guidelines for the positions where to apply the liquid.
- Soak the cleaning liquid into the entirety of the head cleaning sheet covering the wiping part. Rubbing the print heads with a dry sheet may lead to malfunctions.

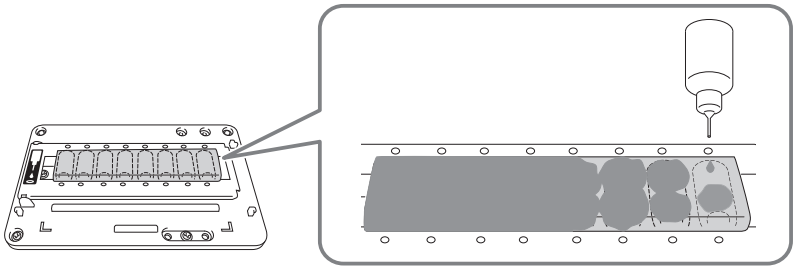

**IMPORTANT**

**Do not leave the bottle of cleaning liquid for head refreshing on the flat table.**

Leaving the cleaning liquid bottle on the flat table and proceeding to the next operation will lead to an error caused by the bottle hitting the head gap sensor.

**15.** **Close the front cover.**

**16.** **Press [ENTER].**

```
APPLY CL-LIQUID◀
START REFRESH  ↵
```

The screen shown below appears, and head refreshing starts. The (approximate) remaining time for the procedure is displayed on the screen. (The display shown below is an example. "01:45" = "1 minute and 45 seconds")

```
CLEANING...
>>          01:45
```

**MEMO**

If the possibility of the print heads hitting the head refresher (or some other obstacle) is detected, head refreshing is canceled and the following message is displayed.

```
CHECK HEIGHT OF
HEAD REFRESHER ↵
```

Press [ENTER] to clear the message.

If the jig is in the way or has not been attached correctly, the head refresher position may be too high. Correctly reattach the head refresher by removing the jig or reviewing how the jig is attached. Then, perform head refreshing again.

**17.** **When the following screen is displayed, open the front cover.**

```
REMOVE HEAD
     REFRESHER ↵
```

**18.** **Open the sheet retaining cover and remove the head cleaning sheet.**

Remove the sheet by pinching parts that are clean of ink and cleaning liquid. Use tweezers or gloves if getting cleaning liquid on your hands seems unavoidable.

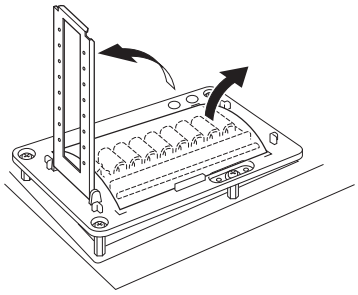

**19.** **Check that there are traces of ink being wiped off onto the head cleaning sheet.**

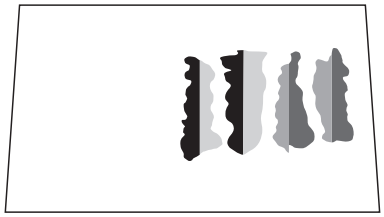

**IMPORTANT**

**Quickly dispose of used head cleaning sheets.**

Leaving a used head cleaning sheet inside the machine may lead to the machine's painting peeling off.

**Point**

- If there are minor traces of ink being wiped off onto the sheet, head refreshing has failed. Check the following points, and then perform head refreshing again.
  - Has the head cleaning sheet been attached in the correct position?
  - Is the head cleaning sheet loose?
  - Has cleaning liquid soaked into the entirety of the head cleaning sheet?
  - Has too much cleaning liquid been applied? (The appropriate amount is two drops per cleaning pad.)
- Cleaning pads cannot be used if they are severely deformed (warped or tilted) or are coming free of the unit. Replace the cleaning pad unit. For information on replacement, contact your authorized Roland DG Corporation dealer.

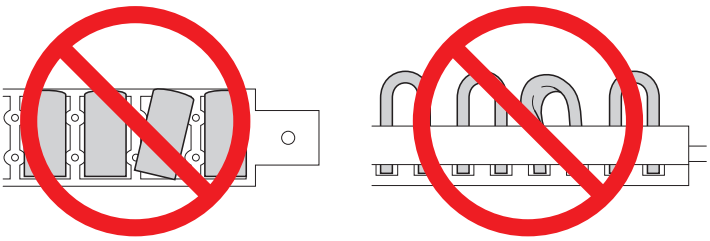

**20.** **Remove the head refresher.**

**MEMO**

You can place the head refresher in the space on the left side of the machine.

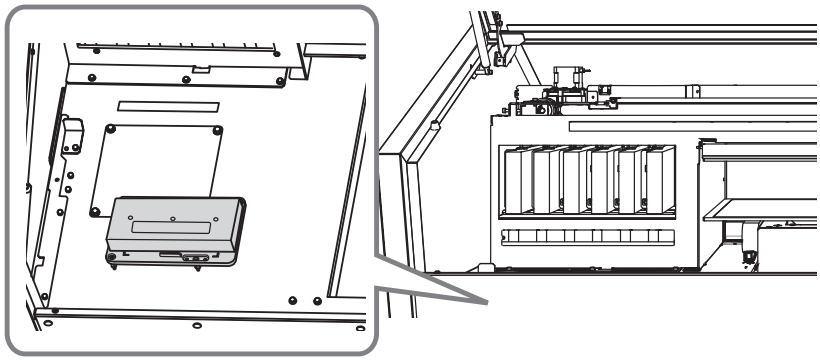

**21.** **Close the front cover.**

**22.** **Switch off the sub power.**

**RELATED LINKS**


- P. 197 "Inquiries for Consumable Parts and Products"
- P. 96 "Setting the Installation Height of the Head Refresher"

# Pausing and Canceling Printing

You can pause and cancel printing before it finishes.

## Pausing and Resuming Printing

**IMPORTANT**

We do not recommend resuming printing because horizontal stripes are produced at the place where printing was paused.

**Procedure**

1. **Press [PAUSE] before printing finishes.**

   Printing pauses.

2. **Press [PAUSE] again.**

   Printing resumes.

## Canceling Printing

**Procedure**

1. **Press [PAUSE] before printing finishes.**

   Printing pauses.

2. **When the screen shown below appears, hold down [SETUP] for 1 second or longer.**

   

   This cancels printing operation.

3. **Stop sending the output data from the computer.**

# Optimizing Quality and Efficiency

# Optimizing the Setup Method


Adjusting the Height ..... 65
- Setting the Height of the Object to Be Printed On Manually ..... 65
- Adjusting the Distance between the Object to Be Printed On and the Print Heads ... 67
- Enabling Automatic Height Adjustment during Printing ..... 68
- Determining the Maximum Value (Threshold) for Automatic Height Adjustment ..... 69
- Notes When the Print Surface Is Uneven ..... 70
- Changing the Z-axis (Height) Origin ..... 71

Print Area Settings ..... 72
- Fixing the Base Position of the Print Area ..... 72
- Setting the Print Area Using the Center of the Print Area as the Base Position ..... 73
- Changing Just the Base (Home) Position ..... 79

# Adjusting the Height

## Setting the Height of the Object to Be Printed On Manually

This section explains how to manually set the height of the object to be printed on. This is suited to the case when you do not want the head gap sensor to come in contact with the object to be printed on and the case when you want to set the distance between the heads and the object to be printed on.

The manual setting takes a little longer than the automatic setting because you need to visually set the height.

If the print surface is uneven, there is a limit to the area of unevenness.

**IMPORTANT**

Be sure to hold the handle of the front cover and open and close it gently.

### Procedure

1. **Secure the object to be printed on in place on the flat table.**
2. **Close the front cover.**
3. **Check that the following screen is displayed.**

   SETUP MEDIA

   If this screen is not displayed, check that nothing has been placed on top of the flat table, and then hold down [SETUP] for 1 second or more.

   [SETUP] turns off, and the flat table comes forward.

   The above screen appears, and the object to be printed on can be set up.
4. **Press [SETUP].**

   [SETUP] starts to flash.
5. **Open the front cover.**
6. **Press [▲], [▼], [UP] or [DOWN] to move the flat table, bringing the head gap sensor as close to the print surface as possible.**

   **IMPORTANT**

   - Set the height of the table in a way that the highest position of the print surface will not come into contact with the head gap sensor.
   - Note that print quality will deteriorate as the distance between the head gap sensor and print surface widens.

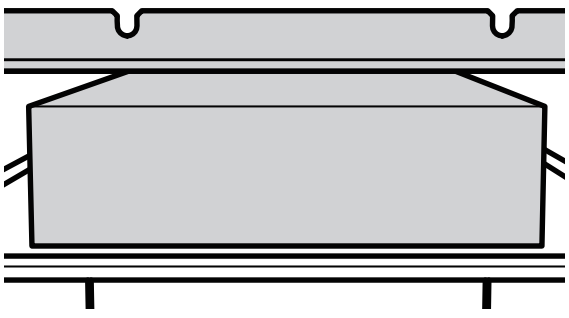

**MEMO**

When the screen shown below appears

Press [ENTER] on this screen to start the automatic detection of the height. During automatic detection, the head gap sensor comes into contact with the object to be printed on. If you do not want to perform automatic detection, press [◀] to return to the original screen.

**7.** **Close the front cover when it is open.**

**8.** **When the location is set, press [ENTER].**

**RELATED LINKS**

- P. 35 "Three Checks before Printing"
- P. 70 "Notes When the Print Surface Is Uneven"

## Adjusting the Distance between the Object to Be Printed On and the Print Heads

If the height (thickness) of the object to be printed on varies or if the object to be printed on is lifted or warped during printing, the object to be printed on might come into contact with the print heads. You can expand the distance between the object to be printed on and the print heads in advance to prevent issues like this from happening.

**IMPORTANT**

- If the distance is expanded too much, the print quality may be deteriorated and the nozzles of the print heads may be clogged. Configure the settings so that the distance between the highest position of the object to be printed on and the lowest position of the print surface is 2 mm (78.7 mil) or less.
- This setting is enabled when the height of the object to be printed on is set automatically.

### Procedure

1. **Press [MENU].**
2. **Press [▼] to display the screen shown below.**

3. **Press [▶] once, and then press [▼] several times to display the screen shown below.**

4. **Press [▶] to display the screen shown below.**

5. **Press [▲] or [▼] to set the distance between the object to be printed on and the print heads.**

   You can adjust the distance in increments of 0.1 mm (3.9 mil).

| "AUTO-DOWN" | Distance between the object to be printed on and the print heads |
|---|---|
| 0.0 mm (default setting) | 1.0 mm (39.4 mil) |
| : | : |
| 2.0 mm (78.7 mil) | 3.0 mm (118.1 mil) |

6. **Press [ENTER] to confirm your entry.**
7. **Press [MENU], then [◀] to go back to the original screen.**

**RELATED LINKS**

• P. 76 "The height of the object to be printed on is detected automatically."

## Enabling Automatic Height Adjustment during Printing

This setting allows the height to be readjusted automatically to continue printing even when the object to be printed on moves out of position or lifts up and comes into contact with the head gap sensor during printing. This function is effective when using objects that cannot be reprinted on.

### Procedure

1. **Press [MENU].**
2. **Press [▼] to display the screen shown below.**

3. **Press [▶] once, and then press [▼] several times to display the screen shown below.**

4. **Press [▶] twice.**

5. **Press [▲] or [▼] to select "RE-ADJ".**

| "CLEARANCE MODE" | Explanation |
|---|---|
| "RE-ADJ" | The height is readjusted and printing continues even when the object to be printed on comes into contact with the head gap sensor during printing. |
| "CANCEL" (Default settings) | Printing and setup will be canceled when the object to be printed on comes into contact with the head gap sensor during printing. |

6. **Press [ENTER] to confirm your entry.**
7. **Press [MENU], then [◀] to go back to the original screen.**

**MEMO**

- After printing, "READJUST TABLE HEIGHT" is displayed if the height was automatically adjusted. (Default settings)
- To prevent "READJUST TABLE HEIGHT" from being displayed, set "CLEARANCE MODE MSG. SETTING" to "DISABLE" according to "Main Menu(P. 17)" .
- When the height is readjusted automatically and printing continues, the height setting is changed. Therefore, the print quality may be changed. Hence, proper printing requires that the object to be printed on be secured properly before printing to keep it from moving out of position or lifting up.
- At the time when the height is readjusted automatically, the head gap sensor comes into contact with the object to be printed on.
- Even if "RE-ADJ" is selected, printing and setup will be canceled in the following cases.
  - When the height reaches the maximum value (threshold) of automatic adjustment
  - When the object to be printed on comes into contact with the head gap sensor during automatic readjustment, even if the flat table has moved to the bottom
- The maximum value (threshold) for readjustment can be set.
- When printing is canceled, "CANCELED FOR TABLE HEIGHT" or "CHECK TABLE HEIGHT" is displayed.

**RELATED LINKS**

• P. 69 "Determining the Maximum Value (Threshold) for Automatic Height Adjustment"

## Determining the Maximum Value (Threshold) for Automatic Height Adjustment

You can set the maximum value (the threshold) to use when automatically adjusting the height of the table during printing.

This setting is only enabled when "CLEARANCE MODE" is set to "RE-ADJ".

### Procedure

1. **Press [MENU].**
2. **Press [▼] to display the screen shown below.**

3. **Press [▶] once, and then press [▼] several times to display the screen shown below.**

4. **Press [▶], then [▼] to display the screen shown below.**

5. **Press [▶].**
6. **Press [▲] or [▼] to select the threshold.**

| "THRESHOLD" | Explanation |
|---|---|
| 0.1 mm to 10.0 mm<br>(Default setting: 10.0 mm) | The maximum value (the threshold) to use when automatically adjusting the height of the table during printing. |

7. **Press [ENTER] to confirm your entry.**
8. **Press [MENU], then [◀] to go back to the original screen.**

**MEMO**

The greater the distance between the print surface and the print head, the greater the trend for the printing image quality to drop. Therefore, it is beneficial to minimize the adjustment width. Keep the following points in mind when determining the setting value.

- Consider the effect on the printing image quality in order to obtain satisfactory image quality.
- The variation in height across the entire print surface (not the print target area but including parts that will not be printed)

## Notes When the Print Surface Is Uneven

This machine can also print on uneven surfaces. However, remember the following points for the height setting.

- The gap between the "highest position of the object to be printed on" (①) and the "lowest position of the print surface" (②) should be 2 mm (78.7 mil) or less (③; as a general guide).

Print quality at the lower position degrades as the height gap widens.

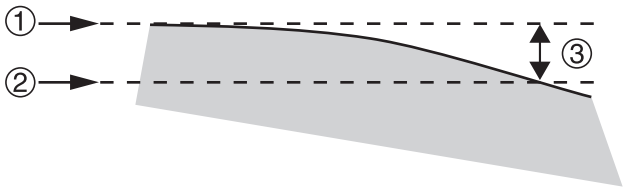


- Printing on a surface (②) that is perpendicular to the print heads (①) is not possible.

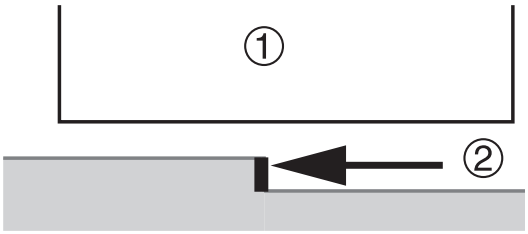

## Changing the Z-axis (Height) Origin

You can select whether to set the origin of the Z axis (which indicates the distance in the height direction) to the lowest or highest position on the Z axis.

**Procedure**

1. **Press [MENU].**
2. **Press [▼] to display the screen shown below.**

3. **Press [▶] once, and then press [▼] several times to display the screen shown below.**

4. **Press [▶].**
5. **Press [▲] or [▼] to select "SET Z AXIS".**

| "SET Z AXIS" | Explanation |
|---|---|
| "HGT" (Default settings) | The lowest position on the Z axis is used for the origin (0 mm), and the distance up along the axis from the origin is displayed as "HGT" (the height). |
| "THK" | The highest position on the Z axis is used for the origin (0 mm), and the distance down along the axis from the origin is displayed as "THK" (the thickness). The value displayed as "THK" takes into account items such as the height of the flat table. Therefore, the displayed value may differ from the actual thickness of the object to be printed on. |

6. **Press [ENTER] to confirm your entry.**
7. **Press [MENU], then [◀] to go back to the original screen.**

# Print Area Settings

## Fixing the Base Position of the Print Area

You can use a positioning jig to fix the lower right corner of the flat table as the base position (home position) of the print area.

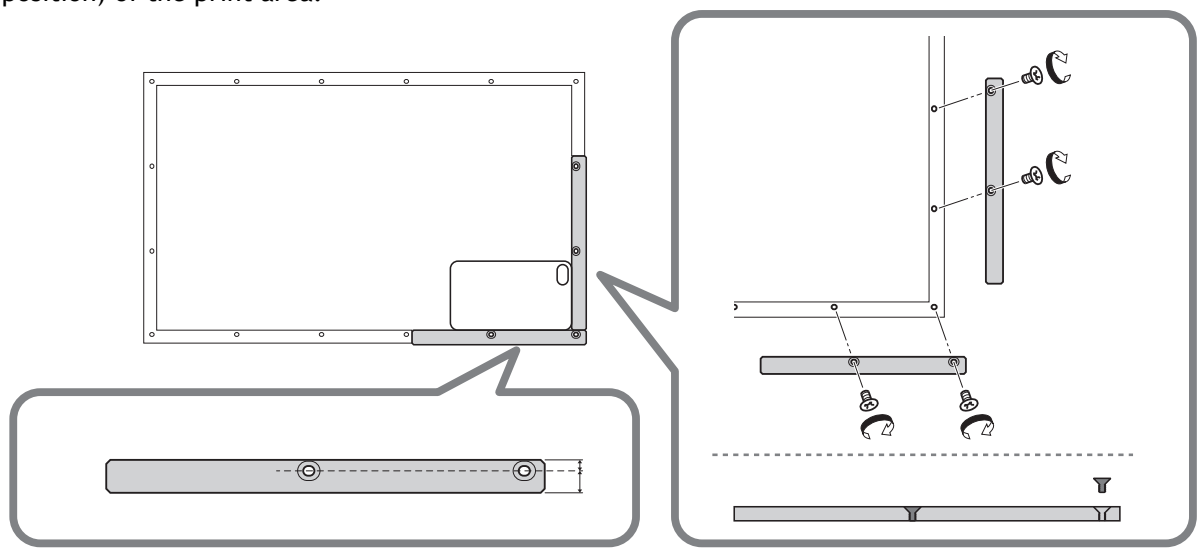

**MEMO**

**The positioning jig has a correct orientation for use. Use the figure above as a reference.**

- The side farther from the fixing holes comes to the outside.
- Make sure that the top and bottom sides are correct.

**You can also use multiple positioning jigs according to the size of the object to be printed on.**

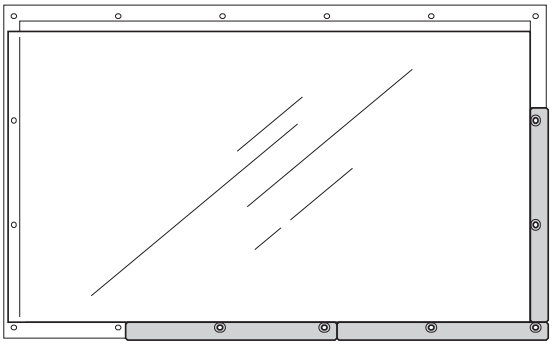

**IMPORTANT**

When using positioning jigs, select objects to be printed on that have a thickness of 3 mm (0.1 in.) or more. If the object is less than 3 mm (0.1 in.) thick, the print surface will be lower than the positioning jigs, preventing the height from being set correctly.

## Setting the Print Area Using the Center of the Print Area as the Base Position

### 1. Set the machine so that the print area is set each time before setting up the media.

Prevent printing in the incorrect position by specifying the print area before setting up the object to be printed on.

**Procedure**

1. **Press [MENU].**
2. **Press [▼] to display the screen shown below.**

3. **Press [▶] twice to display the screen shown below.**

4. **Press [▲] or [▼] to select "ENABLE".**

5. **Press [ENTER] to confirm your entry.**
6. **Press [◀].**

## 2. Set the base printing position to the center of the print area.

Set the base printing position (home position) in the center of the print area. This setting method is appropriate when clear specification of the print area is difficult or when the print site is curved or uneven.

Print area setup can be performed with the front cover open. However, if the front cover is left open for approximately 40 seconds, the print heads automatically return to the home position to prevent the print heads from drying out. The menu returns to the previous one. Repeat the procedure.

**Procedure**

1. **Press [▼] twice, and then press [▶] once to display the screen shown below.**

2. **Press [▲] or [▼] to select "CENTER".**

3. **Press [ENTER] to confirm your entry.**

4. **Press [MENU], then [◀] to go back to the original screen.**

MEMO

Setting the base printing position to "CENTER" disables the "FUNCTION CHANGE ORIGIN" menu.

P. 79 "Changing Just the Base (Home) Position"

## 3. Attach the object to be printed on.

**IMPORTANT**

Be sure to hold the handle of the front cover and open and close it gently.

**Procedure**

1. **Check that the following screen is displayed.**

   SETUP MEDIA

   If this screen is not displayed, check that nothing has been placed on top of the flat table, and then hold down [SETUP] for 1 second or more.

   [SETUP] turns off, and the flat table comes forward.

   The above screen appears, and the object to be printed on can be set up.

2. **Open the front cover.**

3. **Secure the object to be printed on.**

   A jig might be required according to the shape of the object to be printed on.

   The following figure shows an example of using jigs to fit the shape of the object to be printed on.

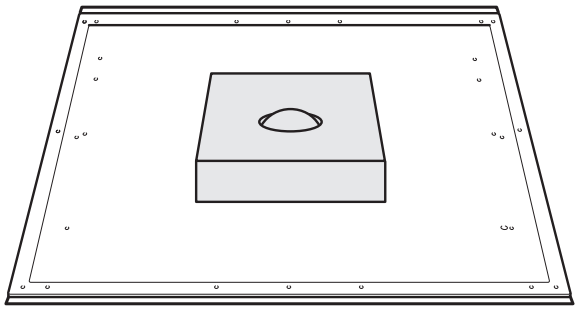

4. **Close the front cover.**

**RELATED LINKS**


- P. 35 "Three Checks before Printing"

## 4. The height of the object to be printed on is detected automatically.

The height of the object to be printed on is automatically detected, and the print heads are adjusted to the appropriate height for printing.

**Procedure**

1. **Press [SETUP].**

   [SETUP] starts to flash.

2. **Open the front cover.**

3. **Press [▲], [▼], [UP] or [DOWN] to move the flat table, bringing the highest position of the print surface into contact with the head gap sensor.**

   When the head gap sensor reacts, a buzzer goes off.

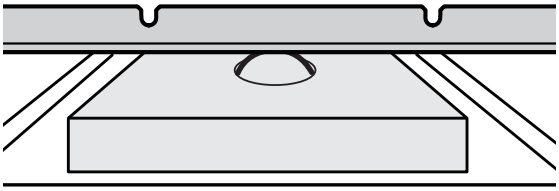

4. **Press [▶] to display the screen shown below.**

   

5. **Close the front cover.**

   **IMPORTANT**

   The following step moves the flat table rearward. If the object to be printed on hits the head gap sensor forcefully, the object to be printed on may be damaged or the head gap sensor may malfunction.

   To re-adjust the height of the object to be printed on, press [◀] and redo the procedure from step 2.

6. **Press [ENTER].**

   The flat table moves and the height of the object to be printed on is detected. The flat table rises while moving backward and forward until the object to be printed on reaches a position where it comes in contact with the head gap sensor.

   When the flat table stops moving and one short beep is heard, the setup is complete.

   The height of the object to be printed on will be set automatically to a position about 1 mm (39.4 mil) away from the print head's ink emission surface.

   **MEMO**

   You can change the distance between the ink emission surface of the print heads and the object to be printed on.

**RELATED LINKS**

• P. 67 "Adjusting the Distance between the Object to Be Printed On and the Print Heads"

## 5. Set the print area.

For a printing test, set the print area with a "WIDTH" of 90 mm (3.5 in.) or more and a "LENGTH" of 70 mm (2.8 in.) or more. An error will occur and printing tests cannot be performed if the area is smaller than this.

**Procedure**

**1. Press [▲], [▼], [▶] or [◀] when the following screen appears.**

```
SCAN:     0.0mm
FEED:     0.0mm ↵
```

The flat table and the print heads move so that the pointer points at the previously set printing base position.

**2. Press [▲], [▼], [▶] or [◀] to move the pointer until it points to a position in the center of the print area.**

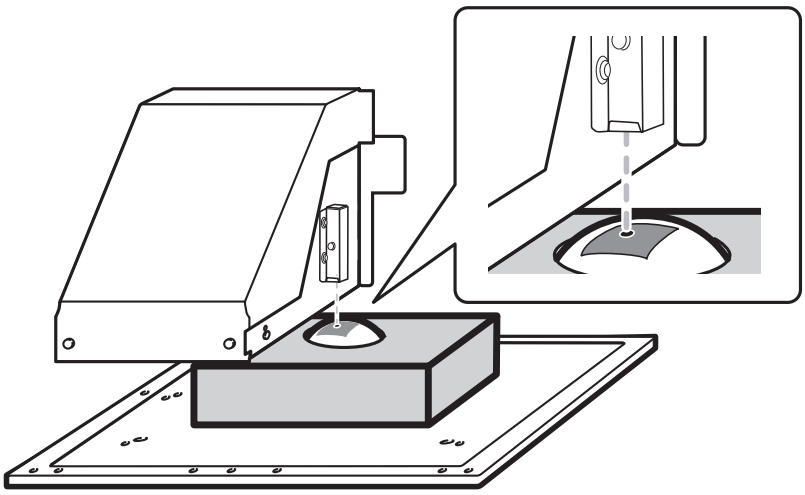

**MEMO**

**When the pointer is difficult to see**

Depending on the material of the object to be printed on, such as transparent media or high-gloss media with dark colors used on the print surface, the pointer may be difficult to see. In such cases, the pointer may become more visible by placing masking tape on the print surface or on the back.

**3. Press [ENTER].**

The print heads return to the home position and the following screen is displayed.

```
WIDTH: XXX.Xmm
LENGTH:XXX.Xmm ↵
```

**MEMO**

- The previously set values are displayed for "WIDTH" and "LENGTH".
- When the object to be printed on comes into contact with the head gap sensor, the setup is canceled and the screen shown below appears. Redo from "4. The height of the object to be printed on is detected automatically.(P. 76)" .

```
CHECK TABLE
      HEIGHT ↵
```

When "CLEARANCE MODE" is set to "RE-ADJ", the setup is not canceled and operation continues.

**4. Press [▲], [▼], [▶] or [◀] to set "WIDTH" and "LENGTH" to values that match the width and length of the print area.**

**5.** **Close the front cover when it is open.**

**6.** **Press [ENTER].**

The print area is specified. Print heads return to the standby position.

**7.** **Make sure the "W" ("WIDTH"), "L" ("LENGTH"), and "H" ("HEIGHT") values on the menu screen are as intended.**

MEMO

- If you want to use the print area specified here for the next printing operation, switch "SET AT SETUP" to "DISABLE". With this setting, you can set up the object to be printed on without setting the print area and base position.
  P. 91 "Omitting the Setting of the Print Area"
- Automatic return is not possible for a set base printing position (home position). In other words, the setting must be configured again if the base printing position (home position) differs, such as when selecting a new object to be printed on.

## Changing Just the Base (Home) Position

You can change just the base (home) position for each printing operation. Even if you change the base position, the diagonal position does not change, so the "WIDTH" and "LENGTH" values are changed according to the change to the base position.

### 1. Check that "SET BASE POS." is set to "LOWER R".

**Procedure**

1. **Press [MENU].**
2. **Press [▼] to display the screen shown below.**

3. **Press [▶] once, and then press [▼] several times to display the screen shown below.**

4. **Press [▶] to display the screen shown below.**

5. **If "CENTER" is selected, press [▲] or [▼] to select "LOWER R".**

   If "LOWER R" is already selected, proceed to step 7.

6. **Press [ENTER] to confirm your entry.**
7. **Press [MENU], then [◀] to go back to the original screen.**

## 2. Change the base (home) position.

**Procedure**

1. **Press [FUNCTION].**
2. **Press [▼] several times to display the screen shown below.**

3. **Press [ENTER].**
4. **Press [▲], [▼], [▶] or [◀] when the following screen appears.**

The flat table and the print heads move so that the pointer points at the previously set printing base position.

5. **Press [▲], [▼], [▶] or [◀] to move the pointer until it points to a position in the right foreground of the print area.**

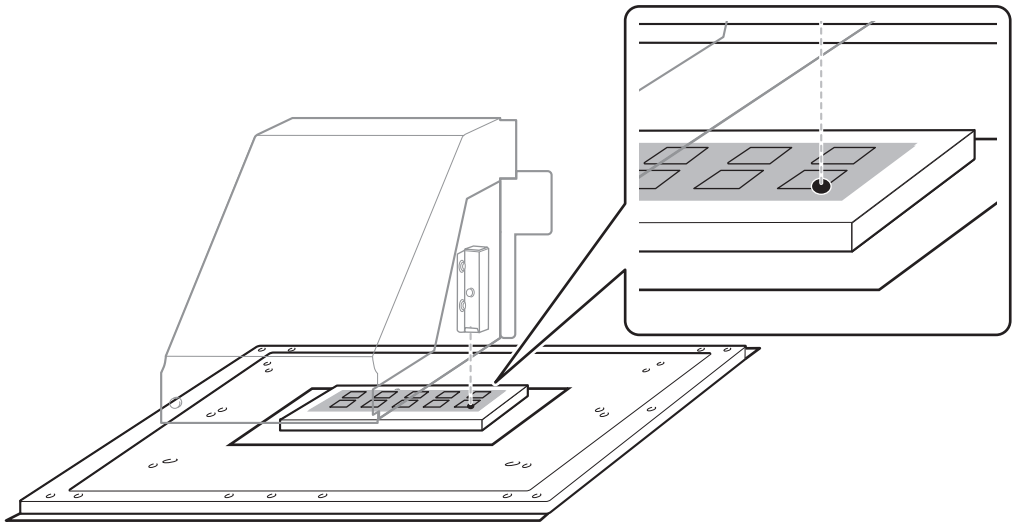

MEMO

**When the pointer is difficult to see**

Depending on the material of the object to be printed on, such as transparent media or high-gloss media with dark colors used on the print surface, the pointer may be difficult to see. In such cases, the pointer may become more visible by placing masking tape on the print surface or on the back.

6. **Press [ENTER].**

The base (home) position for printing is changed.

The print heads return to the home position and the following screen is displayed.

7. **Press [FUNCTION] to go back to the original screen.**

# Optimizing the Printing Quality

Preventing Ink Discharge Defects .....82
Preventing Soiling of the Object to Be Printed On and Dot Drop-out .....82
Reducing Ink Mist (Ink Spatter).....83
Preventing Primer Dot Drop-out .....84
Improving Ink Adhesion .....85
Additional UV Lamp Illumination after Printing .....85

# Preventing Ink Discharge Defects

## Preventing Soiling of the Object to Be Printed On and Dot Drop-out

Removing the ink buildup on the print head surface before or during printing prevents soiling of the object to be printed on, dot drop-out, and dot displacement.

In the following cases, ink tends to collect on the surface of the print heads.

- When you use an object to be printed on that is prone to a buildup of static charge
- When the ambient temperature is low.

### Procedure

1. **Press [MENU].**
2. **Press [▼] to display the screen shown below.**

3. **Press [▶] once, and then press [▼] several times to display the screen shown below.**

4. **Press [▶] to display the screen shown below.**

5. **Press [▲] or [▼] to select an item.**

| "PERIODIC CL." | Explanation |
|---|---|
| "PAGE" | Automatic cleaning is performed each time prior to the start of printing. |
| 5 to 990 "MIN" | Automatic cleaning is performed each time prior to the start of printing. Cleaning is also performed during printing when the set time elapses. The color may become uneven because the printing is paused. |
| "NONE" (Default settings) | Cleaning during printing is not performed. |

6. **Press [ENTER] to confirm your entry.**
7. **Press [MENU], then [◀] to go back to the original screen.**

**MEMO**

Using "PAGE" or a value from 5 to 990 "MIN" results in longer printing times.

## Reducing Ink Mist (Ink Spatter)

Under some printing conditions (such as low temperature or when a static charge is likely), a greater amount of ink mist (ink spatter during printing) may be produced and adversely affect the print quality. In these cases, you may be able to alleviate the symptom by lowering the rotation of the carriage fan.

### Procedure

1. **Press [MENU].**
2. **Press [▼] to display the screen shown below.**

3. **Press [▶] once, and then press [▼] several times to display the screen shown below.**

4. **Press [▶] to display the screen shown below.**

5. **Press [▲] or [▼] to select an item.**

| "MIST CATCHER" | Explanation |
|---|---|
| "HIGH" (Default settings) | Rotates the carriage fan at high speed. |
| "MIDDLE" | Rotates the carriage fan at middle speed. |
| "LOW" | Rotates the carriage fan at low speed. |
| "OFF" | Does not rotate the carriage fan. |

6. **Press [ENTER] to confirm your entry.**
7. **Press [MENU], then [◀] to go back to the original screen.**

**MEMO**

Whether the symptom can be alleviated or not depends on the temperature and the type of object to be printed on. Be sure to check the print status as you adjust the setting.

However, the purpose of the carriage fan is to prevent ink buildup on the surface of print heads. Lowering its rotation will lead to more dot drop-outs. This means, if you specify "MIDDLE""LOW" or "OFF", you should perform normal cleaning more frequently. The "PERIODIC CL." setting is also effective against dot drop-outs.

**RELATED LINKS**

• P. 82 "Preventing Soiling of the Object to Be Printed On and Dot Drop-out"

## Preventing Primer Dot Drop-out

This cleaning prevents dot drop-out for printers equipped with primer. When data that includes primer or white is printed, cleaning is performed if the time that has elapsed since the last cleaning operation exceeds the set time.

This cleaning function can only be used when you are using primer (the ink type is ECO-UV CMYKPrW or ECO-UV 4CMYKPrW).

### Procedure

1. **Press [MENU].**
2. **Press [▼] to display the screen shown below.**

3. **Press [▶] once, and then press [▼] several times to display the screen shown below.**

4. **Press [▶] to display the screen shown below.**

5. **Press [▲] or [▼] to select an item.**

| "PRIMER CL." | Explanation |
|---|---|
| "PAGE" | Automatic cleaning is performed each time prior to the start of printing. |
| 10 to 360 "MIN" | If the time that has elapsed since the last cleaning operation exceeds the set time, cleaning will be performed before printing starts. You can set the value in units of 10 minutes from 10 minutes to 360 minutes. |
| "NONE" (Default settings) | Cleaning is not performed prior to the start of printing. |

6. **Press [ENTER] to confirm your entry.**
7. **Press [MENU], then [◀] to go back to the original screen.**

# Improving Ink Adhesion

## Additional UV Lamp Illumination after Printing

When the ink is not completely cured after printing is complete, cure the ink by illuminating it once again with the UV-LED lamp.

A characteristic of UV ink is that it cures quickly when exposed to light from the UV-LED lamp, but curing may be difficult for materials that absorb ink like cloth. This function may alleviate this symptom.

**Procedure**

1. **Press [FUNCTION].**
2. **Press [▼] several times to display the screen shown below.**

   

3. **Press [ENTER].**

   The print heads move, and the print area is illuminated by the UV-LED lamp.

   MEMO

   - This function cannot be used if the setup of the object to be printed on has been canceled ([SETUP] is off).
   - The UV-LED lamp illuminates the print area configured in the setup of the object to be printed on.
   - To change the range of emission, readjust the print area.
   - The effect depends on the material of the object to be printed on.
   - You can stop the operation by pressing [ENTER] while operation is in progress.

     

   - With VersaWorks, you can configure the settings so that additional emission continues after printing without using this function. For more information, see the VersaWorks manual.

**RELATED LINKS**

- VersaWorks User's Manual (https://downloadcenter.rolanddg.com/VersaWorks6)

# Optimizing Work Efficiency


Using the Preset Function ..... 87
- Saving the Current Settings in Presets ..... 87
- Load a Preset and Print ..... 89
- Making Fine Adjustments and Printing a Preset ..... 90

Reducing Print Time ..... 91
- Omitting the Setting of the Print Area ..... 91
- Continuously Printing Multiple Sets of Data ..... 92
- Minimizing Print Head Movement ..... 93
- Setting the Smallest Possible Print Area ..... 94

Reducing Paper Used during Printing Tests ..... 95
- Performing Printing Tests Arranged Horizontally ..... 95

Optimizing Head Refreshing Work When Using Jigs ..... 96
- Setting the Installation Height of the Head Refresher ..... 96

# Using the Preset Function

## Saving the Current Settings in Presets

The settings configured in the setup for the object to be printed on can be saved as a preset. You can save up to 40 different presets.

The following settings can be saved.

- Base (home) position to be set up every time
  P. 73 "1. Set the machine so that the print area is set each time before setting up the media."
- Height of the object to be printed on (thickness)
  P. 65 "Setting the Height of the Object to Be Printed On Manually"
- Print area (including the printing base position)
  P. 51 "3. Set the print area."
  P. 73 "Setting the Print Area Using the Center of the Print Area as the Base Position"
- Base printing position
  P. 40 "3. Set the lower-right corner of the object to be printed on to the base printing position."
  P. 74 "2. Set the base printing position to the center of the print area."
- Continuous printing
  P. 92 "Continuously Printing Multiple Sets of Data"
- Fixed-width printing
  P. 93 "Minimizing Print Head Movement"

  You can assign a name to each preset. Using the names of the objects to be printed on for these presets may aid recognition.

### Procedure

1. **Set up the object to be printed on (height position, print area), and then check that [SETUP] is lit.**
2. **Press [MENU].**
3. **Press [▶] once, and then press [▼] twice to display the screen shown below.**

   

4. **Press [▶] to display the screen shown below.**

   

5. **Decide on the preset number.**
   (1) **Press [▲] or [▼] to select from "NAME1" to "NAME40".**
   (2) **Press [ENTER] to confirm your entry.**
   The current menu settings are saved, and then the screen shown below appears.

   

6. **Set the preset name.**
   (1) **Press [▲] or [▼] to select a character.**
   (2) **When you have selected the character you want to enter, press [▶].**
   The characters you can enter are "A" through "Z," "0" through "9," and the "-" character.
   (3) **Press [▲] or [▼] to select the next character.**

Select the following characters in the same way. You can enter up to 15 characters, including spaces.

(4) **When you have finished, press [ENTER] to confirm your entry.**

**7.** **Press [MENU], then [◀] to go back to the original screen.**

## Load a Preset and Print

This loads a saved preset from among the 40 types of presets. If you load a preset while [SETUP] is lit, [SETUP] flashes. After that, when the setup operation is complete, [SETUP] returns to being lit.

### Procedure

1. **Press [MENU].**
2. **Press [▶], then [▼][▶] to display the screen shown below.**

3. **Select the preset that you want to load.**

   Select one of the 40 types of presets (when no names have been assigned, select from "NAME1" to "NAME40") or "DEFAULT" ("DEFAULT" is the factory defaults for each setting).

   (1) **Press [▲] or [▼] to select the name of the preset you want to load.**

   (2) **Press [ENTER] to confirm your entry.**

   Setup is canceled and [SETUP] turns off. The selected preset name is displayed on the lower right side of the screen.

4. **Attach the object to be printed on.**
5. **Press [SETUP].**

   The loaded preset setting is displayed.

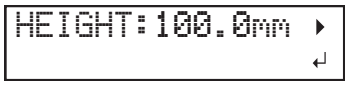


6. **Press [ENTER].**

   The screen shown below appears.

7. **Perform printing.**

## Making Fine Adjustments and Printing a Preset

You can change part of a preset and then perform printing. For instance, you can just change the height of the object to be printed on and the print area without changing the other settings.

### Procedure

1. **Press [MENU].**
2. **Press [▶], then [▼][▶] to display the screen shown below.**

3. **Select the preset that you want to load.**

   Select one of the 40 types of presets (when no names have been assigned, select from "NAME1" to "NAME40") or "DEFAULT" ("DEFAULT" is the factory defaults for each setting).

   (1) **Press [▲] or [▼] to select the name of the preset you want to load.**

   (2) **Press [ENTER] to confirm your entry.**

   Setup is canceled and [SETUP] turns off. The selected preset name is displayed on the lower right side of the screen.

4. **Attach the object to be printed on.**
5. **Press [SETUP].**

   The loaded preset setting is displayed.

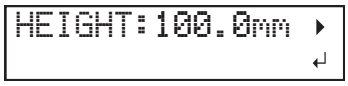


6. **Change the necessary settings, such as height and print area.**
7. **Perform printing.**

**RELATED LINKS**


- P. 42 "The height of the object to be printed on is detected automatically."
- P. 43 "Set the print area."
- P. 53 "Load the print area into VersaWorks."
- P. 55 "Perform printing."
- P. 65 "Adjusting the Height"
- P. 72 "Print Area Settings"
- P. 92 "Continuously Printing Multiple Sets of Data"
- P. 93 "Minimizing Print Head Movement"

# Reducing Print Time

## Omitting the Setting of the Print Area

When repeatedly printing in the same position on objects to be printed on that have the same shape, you can omit the setting of the print area.

**Procedure**

1. **Press [MENU].**
2. **Press [▼] to display the screen shown below.**

3. **Press [▶] twice to display the screen shown below.**

4. **Press [▲] or [▼] to select "DISABLE".**

5. **Press [ENTER] to confirm your entry.**

## Continuously Printing Multiple Sets of Data

You can set up printing so that when multiple sets of print data are sent at a time from the computer, the sent data is continuously printed.

### Procedure

1. **Press [MENU].**
2. **Press [▼] to display the screen shown below.**

3. **Press [▶] once, and then press [▼] several times to display the screen shown below.**

4. **Press [▶] to display the screen shown below.**

5. **Press [▲] or [▼] to select an item.**

| "PRT CONTINUE" | Explanation |
|---|---|
| "ENABLE" | Select this setting when you want to output multiple data entries in a row without replacing the object to be printed on. This function is useful when you want to overlay multiple images on a single object to be printed on. |
| "DISABLE" | Even when multiple data entries are sent at a time from the computer, they are not output in a row and the screen shown below appears after one data entry is printed.<br>FINISHED PRINT ↵<br>If you want to replace the object to be printed on for each set of data, select "DISABLE". |

6. **Press [ENTER] to confirm your entry.**
7. **Press [MENU], then [◀] to go back to the original screen.**

**MEMO**

When "PRT CONTINUE" is set to "DISABLE" and this screen is displayed, no data is accepted from the computer.

Press [ENTER] to return to the screen shown below, at which point it will be possible to once more accept data from the computer.

## Minimizing Print Head Movement

The print time is reduced by restricting the operating range of the print heads. This feature is effective when the print area or print data has a small width.

**Procedure**

1. **Press [MENU].**
2. **Press [▼] to display the screen shown below.**

3. **Press [▶] once, and then press [▼] several times to display the screen shown below.**

4. **Press [▶] to display the screen shown below.**

5. **Press [▲] or [▼] to select an item.**

| "FULL WIDTH S" | Explanation |
|---|---|
| "PRTAREA" | "PRTAREA" adjusts the operating range of the print heads to the preset print area. |
| "OFF" | "OFF" matches the range of print heads movement to the print data. Movement is limited to the minimum amount necessary, and this can be expected to yield the fastest printing. When this feature is used, the time needed for the ink to harden is not constant, and an uneven color may result. |
| "FULL" (Default settings) | "FULL" makes the speed of the movement of the object to be printed on constant at all times and produces the most stable printing results. |

6. **Press [ENTER] to confirm your entry.**
7. **Press [MENU], then [◀] to go back to the original screen.**

**MEMO**

For print data whose width gradually narrows (e.g., an inverted triangle), even if "FULL WIDTH S" is set to "OFF", the movement of the print heads may not match the print data. This is to prevent ink-curing failures caused by the print position and is not a malfunction.

## Setting the Smallest Possible Print Area

Specifying the minimum print area allows shortening the print time. Specify the print area to the minimum necessary. This restricts the range of the print head movement, which reduces the print time.

| Example of good settings | Example of bad settings |
|---|---|
| | |
| The blank area in the print area is minimized | The print area has a lot of unnecessary blank areas |

**RELATED LINKS**

- P. 43 "Set the print area."
- P. 72 "Print Area Settings"

# Reducing Paper Used during Printing Tests

## Performing Printing Tests Arranged Horizontally

When performing printing tests successively, you can select "FEED" (vertical printing) or "SCAN" (horizontal printing) as the print position for the second and later tests in comparison to the first test.

**Procedure**

1. **Press [MENU].**
2. **Press [▼] to display the screen shown below.**

3. **Press [▶], then [▲] to display the screen shown below.**

4. **Press [▶] to display the screen shown below.**

5. **Press [▲] or [▼] to select "SCAN".**

| "TEST PRINT POS" | Explanation |
|---|---|
| "SCAN" | The second and later printing tests will be printed side-by-side horizontally. If the area for printing in the scan direction is not sufficient, printing will be performed on the next line. |
| "NONE" (Default settings) | The second and later printing tests will be printed in the same position of the first printing test. |
| "FEED" | The second and later printing tests will be printed side-by-side vertically. If the area for printing in the feed direction is not sufficient, printing will be performed in the next column. |

6. **Press [ENTER] to confirm your entry.**
7. **Press [MENU], then [◀] to go back to the original screen.**

# Optimizing Head Refreshing Work When Using Jigs

## Setting the Installation Height of the Head Refresher

When you install the head refresher on the jig for fixing in place the object to be printed on, you can perform head refreshing with the jig installed. This affects the shortening of the work time and the uniformity of the print quality. If the height of the head refresher changes because it is installed on a jig, set the installation height of the head refresher. If you do not configure this setting, it will not be possible to detect the head refresher position during head refreshing, which will lead to an error message being displayed and will prevent head refreshing from being performed correctly.

**Point**

- When installing the head refresher on a jig, use a jig that changes the installation height of the head refresher by 55 mm (2.2 in.) or less. If the height change exceeds 55 mm (2.2 in.), the head refresher position will be higher than the print heads, so you will not be able to adjust the height.
- To return the installation position of the head refresher to its default, select "DEFAULT" on the "REFRESHER ADJ." screen as shown below.

**Procedure**

1. **Press [MENU].**
2. **Press [▼] to display the screen shown below.**

3. **Press [▶] once, and then press [▼] several times to display the screen shown below.**

4. **Press [▶] to display the screen shown below.**

5. **Press [▲] or [▼] to select "ADJUST イ".**

6. **Press [ENTER].**

   After "NOW PROCESSING.." is displayed and the flat table moves, the screen shown below appears.

7. **Open the front cover.**
8. **Set the jig in place, and then install the head refresher.**

   Remove the head refresher cover. However, it is not necessary to attach the head cleaning sheet.

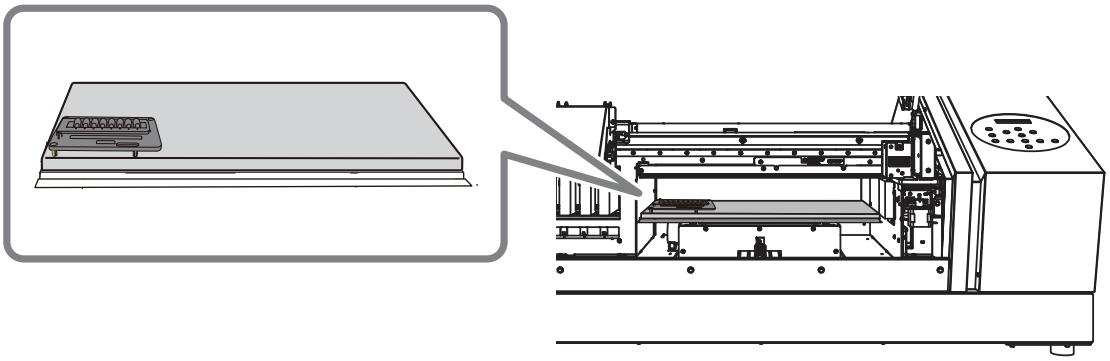

**9.** **Close the front cover.**

**10.** **Press [ENTER].**

"NOW PROCESSING.." is displayed, the flat table moves, and the head refresher height is measured. When the measurement is finished, one of the screens shown below appears.

- When the measurement succeeded

- When the measurement failed

In this situation, the correction value is the default value or the previous setting value. Check the installation position of the head refresher, and then perform the adjustment again.

**11.** **Open the front cover.**

**12.** **Remove the head refresher.**

**MEMO**

You can place the head refresher in the space on the left side of the machine.

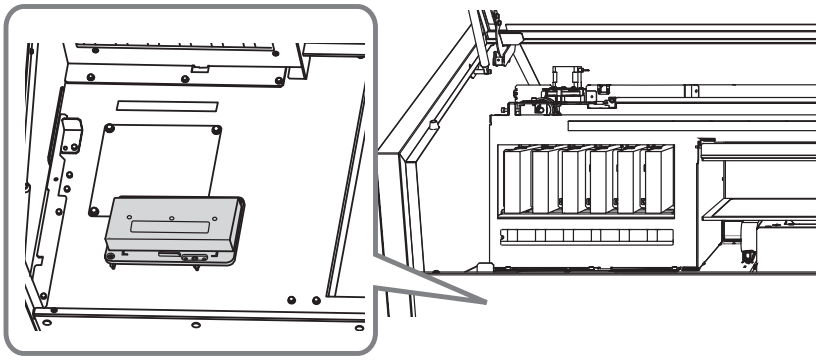

**13.** **Close the front cover.**

**14.** **Press [ENTER].**

**15.** **Press [MENU], then [◀] to go back to the original screen.**

**Point**

To return the installation position of the head refresher to its default, select "DEFAULT" on the "REFRESHER ADJ." screen as shown below.

**RELATED LINKS**


- P. 35 "Three Checks before Printing"
- P. 146 "Head Refreshing Method"
- P. 229 "When using a jig: Hole positions for the head refresher"

# Optimizing Operation Management


Managing the Operations Appropriately and Efficiently ..... 100
Setting the Date and Time ..... 100
Setting the Start Timer ..... 101
Sounding a Buzzer to Notify the User of the End of Printing ..... 103
Determining What Happens When Ink Runs Out ..... 104
Notifying the User of Ink Exceeding Its Shelf Life ..... 105
Checking the Ink Shelf Life ..... 106
Setting the Activation Interval for Sleep Mode (Power-saving Feature) ..... 107
Deactivating the Sleep Mode (Power-saving Feature) ..... 108
Managing the Basic Settings of the Printer ..... 109
Setting the Menu Language and Units of Measurement ..... 109
Viewing System Information ..... 110
Returning All Settings to Factory Defaults ..... 111

# Managing the Operations Appropriately and Efficiently

## Setting the Date and Time

Setting the date and time on the printer makes it possible to use the start timer, which turns on the sub power.

**Procedure**

1. **Press [FUNCTION].**
2. **Press [▼] to display the screen shown below.**

3. **Press [▶], then [▼][▶] to display the screen shown below.**

   (1) **Press [▲] or [▼] to set the year.**
   (2) **Press [▶].**
   (3) **Press [▲] or [▼] to set the month.**
   (4) **Press [▶].**
   (5) **Press [▲] or [▼] to set the day.**

   The number with the cursor (underline) is the one being set. You can use [◀] and [▶] to switch between the year, month, and day.

4. **Press [ENTER] to confirm your entry.**
5. **Press [▼], then [▶] to display the screen shown below.**

   (1) **Press [▲] or [▼] to set the hour.**
   (2) **Press [▶].**
   (3) **Press [▲] or [▼] to set the minute.**
   (4) **Press [▶].**
   (5) **Press [▲] or [▼] to set the second.**

   The number with the cursor (underline) is the one being set. You can use [◀] and [▶] to switch between the hour, minute, and second.

6. **Press [ENTER] to confirm your entry.**
7. **Press [MENU], then [◀] to go back to the original screen.**

**RELATED LINKS**


- P. 101 "Setting the Start Timer"

## Setting the Start Timer

You can set a timer so that the machine finishes starting by the set time.

**Point**

- Before configuring this setting, you need to set the date and time. For information about how to configure the settings, refer to "RELATED LINKS" at the end of this section.
- The timer specifies the next start date and time. Setting a regular start time is not possible.
- The timer can be set to a time between 10 minutes from the set date and time, to 23:50 3 days after the set date and time.
  - The minutes setting of the timer can be set at 10-minute intervals beginning with 00 minutes. Because setting less than 10 minutes is not possible, the following is an example of the shortest possible timer setting.

| | | |
|---|---|---|
| Example | Set date and time | 12/03/17:33 |
| | Configurable timer setting | 12/03/17:50 to 12/06/23:50 |

### Procedure

**1.** **Press [FUNCTION].**

**2.** **Press [▼] to display the screen shown below.**

**3.** **Press [▶] twice to display the screen shown below.**

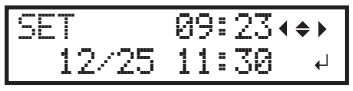


**MEMO**

Refresh the heads if the following screen is displayed during operation. Afterward, start over from the beginning. Continuing with operation without refreshing the heads is possible, but print quality may be affected, and deterioration of the print heads may be accelerated, and is not recommended.

**4.** **Set the date and time at which the machine will finish starting.**

(1) **Press [▲] or [▼] to set the day.**

(2) **Press [▶].**

(3) **Press [▲] or [▼] to set the hour.**

(4) **Press [▶].**

(5) **Press [▲] or [▼] to set the minute.**

(6) **Press [▶].**

The number with the cursor (underline) is the one being set. You can use [◀] and [▶] to switch between the day, hour, and minute.

**MEMO**

The start timer includes settings for day, hour, and minute. If the setting is configured at the end of the month, the setting will include up to 3 days into the following month.

**5.** **Press [ENTER] to confirm your entry.**

**6.** **When the following screen is displayed, press [▲] or [▼] to set an action to be performed before startup completes.**

Startup will complete before the time set with the timer after the action configured here is performed.

| "ACTION" | Explanation |
|---|---|
| "NONE" | No action is performed before startup. |
| "CIRCULATE" | The white ink is circulated to eliminate ink precipitation, which restores the ink concentration. |
| "CLEANING" | Normal cleaning is performed. |
| "CIRCULATE + CL" | After circulating the white ink to eliminate ink precipitation, thereby restoring the ink concentration, normal cleaning is performed. |

**MEMO**

When performing "CIRCULATE", the required time will vary depending on the machine status. This may result in errors occurring for several minutes before startup finishes.

**7. Press [ENTER] to confirm your entry.**

The sub power switches off automatically.

The key buttons on the operation panel flash slowly in order until the next time the machine starts.

**IMPORTANT**

After the sub power switches off, if the operation panel key buttons remain unlit, the timer was not configured. Perform the procedure again.

**MEMO**

If the following messages are displayed before the sub power is turned off, perform the operations indicated by the messages.

| Messages | Explanation |
|---|---|
| 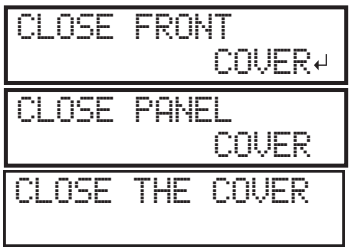 | Close the applicable cover as directed in the message. The sub power turns off automatically when the cover is closed. |
| | Remove the white ink cartridge, shake it 50 times (about 20 seconds) with a stroke length of around 5 cm (2 in.) from each end, and then reinsert it. Afterwards, press [ENTER] to switch off the sub power. |

**MEMO**

- If you switch on the sub power button before the set start time, the start timer is cleared. To enable the start timer, set it again.
- If the front cover is open or an ink cartridge is not inserted appropriately when the set start time is reached, an error will occur and the machine will not be able to start.

**RELATED LINKS**


- P. 100 "Setting the Date and Time"
- P. 135 "Maintenance of Ink Cartridges"
- P. 146 "Head Refreshing Method"
- P. 212 ""CLOSE XXX COVER""
- P. 213 ""DO HEAD REFRESH""

## Sounding a Buzzer to Notify the User of the End of Printing

You can configure the settings so that the user is notified of the end of printing with a buzzer.

**Procedure**

1. **Press [MENU].**
2. **Press [▼] to display the screen shown below.**

3. **Press [▶] once, and then press [▼] several times to display the screen shown below.**

4. **Press [▶] to display the screen shown below.**

5. **Press [▲] or [▼] to select an item.**

| "PRINT END BEEP" | Explanation |
|---|---|
| "OFF" (Default settings) | No buzzer sounds even when printing is finished. |
| "ON" | A buzzer sounds when printing is finished. |

6. **Press [ENTER] to confirm your entry.**
7. **Press [MENU], then [◀] to go back to the original screen.**

## Determining What Happens When Ink Runs Out

This menu lets you determine the operation that takes place when an ink cartridge becomes empty during printing. The print quality will be affected by the selected operation.

### Procedure

1. **Press [MENU].**
2. **Press [▼] to display the screen shown below.**

3. **Press [▶] once, and then press [▼] several times to display the screen shown below.**

4. **Press [▶] twice to display the screen shown below.**

5. **Press [▲] or [▼] to select an item.**

| "EMPTY MODE" | Explanation |
|---|---|
| "STOP" (Default settings) | Printing is paused immediately when an ink cartridge becomes empty. Printing pauses, so colors may be uneven. To prevent uneven colors, ensure that a sufficient amount of ink remains before you begin printing. |
| "CONT." | A buzzer sounds when an ink cartridge becomes empty. Printing continues until all the data that this machine has received is printed. In this case, it is also possible to press [PAUSE] and pause printing. |

6. **Press [ENTER] to confirm your entry.**
7. **Press [MENU], then [◀] to go back to the original screen.**

## Notifying the User of Ink Exceeding Its Shelf Life

Use this menu item to set the machine so that a warning message ("INK SHELF LIFE EXPIRE 123456") is displayed on the screen when the ink's shelf life is exceeded.

This message is displayed when the sub power is turned on for the first time after the ink has expired. A buzzer sounds at the same time the message is displayed.

### Procedure

1. **Press [MENU].**
2. **Press [▼] several times to display the screen shown below.**

3. **Press [▶] twice to display the screen shown below.**

4. **Press [▲] or [▼] to select an item.**

| "SETTING" | Explanation |
|---|---|
| "ENABLE" (Default settings) | The user is notified of ink exceeding its shelf life with a buzzer and a message. |
| "DISABLE" | The user is not notified of the ink exceeding its shelf life. |

5. **Press [ENTER] to confirm your entry.**
6. **Press [MENU], then [◀] to go back to the original screen.**

**MEMO**

Continuing to use ink that has exceeded its shelf life may lead to the following problems and malfunction. We recommend setting this item to "ENABLE".

- Ink leaks from the ink cartridge.
- The ink viscosity increases, leading to ink discharge issues (which may result in decreased print quality).
- The ink hardens, leading to printer malfunctions.

## Checking the Ink Shelf Life

You can use the display to check the shelf lives of the inks in slots 1 to 6.

**Procedure**

1. **Press [MENU].**
2. **Press [▼] several times to display the screen shown below.**

3. **Press [▶], then [▼] to display the screen shown below.**

4. **Press [▶] to display the screen shown below.**

   You can check the shelf lives of the inks.

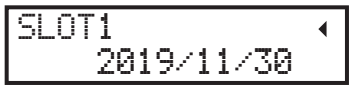


5. **Press [▶].**
6. **Press [▲] or [▼] to display a different slot.**
7. **Press [MENU], then [◀] to go back to the original screen.**

**MEMO**

The shelf life items (the expiration year, month, and day) are blank when:

- The ink cartridge's IC chip is broken or has been lost.
- A system error is occurring on the printer.

**RELATED LINKS**

• P. 105 "Notifying the User of Ink Exceeding Its Shelf Life"

## Setting the Activation Interval for Sleep Mode (Power-saving Feature)

This setting is used to set how long it should take until the machine goes into sleep mode (the state in which the power-saving feature is working) when no print data is received and no operations are performed for a continued length of time.

**Procedure**

1. **Press [MENU].**
2. **Press [▼] to display the screen shown below.**

3. **Press [▶] once, and then press [▼] several times to display the screen shown below.**

4. **Press [▶] twice to display the screen shown below.**

5. **Press [▲] or [▼] to select the time.**

   You can set the value in units of 15 minutes from 15 minutes to 120 minutes.

6. **Press [ENTER] to confirm your entry.**
7. **Press [MENU], then [◀] to go back to the original screen.**

**MEMO**

When "SLEEP SETTING" is set to "DISABLE", the machine does not switch to sleep mode, so this setting is ignored.

**RELATED LINKS**

- P. 108 "Deactivating the Sleep Mode (Power-saving Feature)"

## Deactivating the Sleep Mode (Power-saving Feature)

This setting is used to set the machine so that it never goes into sleep mode (the state in which the power-saving feature is working) when no print data is received and no operations are performed for a continued length of time.

**Procedure**

1. **Press [MENU].**
2. **Press [▼] to display the screen shown below.**

3. **Press [▶] once, and then press [▼] several times to display the screen shown below.**

4. **Press [▶], then [▼] to display the screen shown below.**

5. **Press [▶] to display the screen shown below.**

6. **Press [▲] or [▼] to select an item.**

| "SETTING" | Explanation |
|---|---|
| "ENABLE" (Default settings) | The sleep mode is activated after a certain period of time. |
| "DISABLE" | The sleep mode is not activated. |

7. **Press [ENTER] to confirm your entry.**
8. **Press [MENU], then [◀] to go back to the original screen.**

**RELATED LINKS**

• P. 107 "Setting the Activation Interval for Sleep Mode (Power-saving Feature)"

# Managing the Basic Settings of the Printer

## Setting the Menu Language and Units of Measurement

This feature sets the language and units of measurement displayed on the display screen of the operation panel.

**Procedure**

1. **Hold down [MENU] and switch on the sub power.**
2. **Press [▲] or [▼] to select the display (menu) language.**

3. **Press [ENTER] to confirm your entry.**
4. **Press [▲] or [▼] to select the measurement unit for length.**

5. **Press [ENTER] to confirm your entry.**
6. **Press [▲] or [▼] to select the measurement unit for temperature.**

7. **Press [ENTER] to confirm your entry.**

MEMO

- Default settings
  - "MENU LANGUAGE": ENGLISH
  - "LENGTH UNIT": mm
  - "TEMP. UNIT": °C

## Viewing System Information

This is a method for viewing system information of this machine, such as serial number and ink type.

**Procedure**

1. **Press [MENU].**
2. **Press [▼] several times to display the screen shown below.**

You can view the following information.

- "MODEL": Model name
- "SERIAL NO.": Serial number
- "INK": Ink type
- "FIRMWARE": Firmware version
- "NETWORK": Network settings such as the IP address

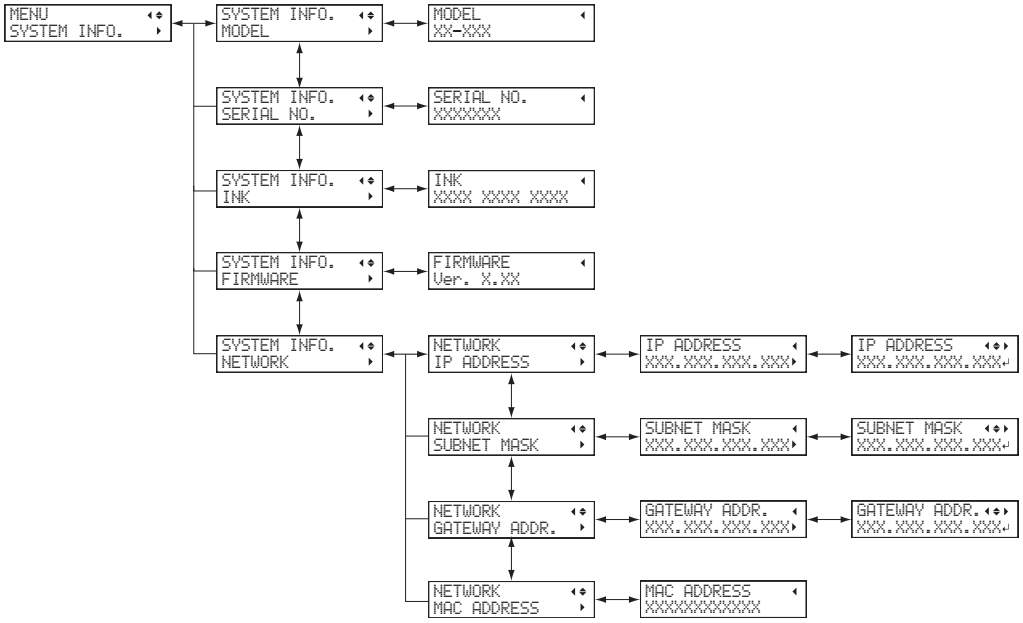


**MEMO**

For information on how to set up a network, see the "Setup Guide."

**RELATED LINKS**

- LEF2-200 Setup Guide (https://downloadcenter.rolanddg.com/LEF2-200)

## Returning All Settings to Factory Defaults

This menu returns all settings to the same as their factory defaults.

The settings for "MENU　LANGUAGE", "LENGTH UNIT", and "TEMP. UNIT" are not returned to their factory default values.

**Procedure**

1. **Press [MENU].**
2. **Press [▼] to display the screen shown below.**

3. **Press [▶] once, and then press [▼] several times to display the screen shown below.**

4. **Press [ENTER].**

# Other Useful Functions

Print with crop marks. ..... 113
What Are "Crop Marks"?..... 113
Print with crop marks..... 113

# Print with crop marks.

## What Are "Crop Marks"?

If you are removing the object that has been printed on and cutting it with a Roland DG Corporation cutting machine, you have to align the printing and cutting positions. By printing the data together with crop marks, you can make it possible to align the positions using the crop marks.

"Crop marks" are marks used to align positions. They are also called "alignment marks."

## Print with crop marks.

**Procedure**

**1. Use your software RIP to configure the settings for printing crop marks. For information on how to make the settings, refer to the documentation for the software RIP you are using.**

**Point**

- When printing with crop marks, a printing range that includes the crop marks is required in the printing data.
- The crop marks are printed as shown in the figure.

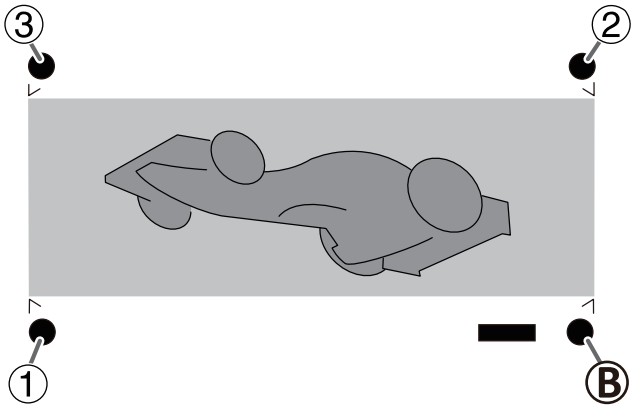


| | |
|---|---|
| ①②③ | Align points |
| Ⓑ | Base point |

# Maintenance

# Introduction

Important Notes on Handling and Use ..... 116
Printer ..... 116
Ink Cartridges ..... 117
Basic Maintenance Knowledge ..... 118
Types and Timing of Maintenance ..... 118
Automatic Maintenance Feature and Notes ..... 120
Alarm Feature ..... 121
Measures When the Printer Is Not in Use for a Prolonged Period ..... 122

# Important Notes on Handling and Use

## Printer

- This machine is a precision device.
  - Never subject the machine to impacts or excessive force.
  - Never needlessly put your hand or fingers inside the cover, the ink-cartridge ports, or other internal areas of the machine.
- Install in a suitable location.
  - Install the machine in a location having the specified temperature and humidity.
  - Install the machine in a quiet, stable location offering good operating conditions.
- Open and close the front cover gently.
  - Be sure to hold the handle of the front cover and keep holding it until the cover is completely opened or closed. If you do not open and close the front cover gently, it may break or you may be injured.

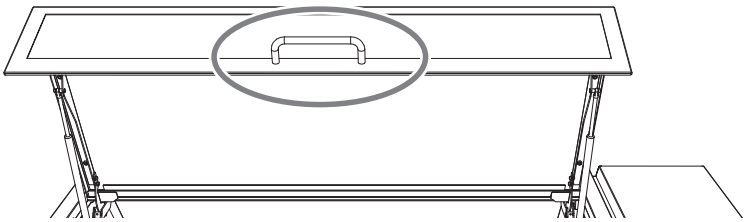

- The print heads and the UV-LED device are delicate devices.
  - Never needlessly touch or allow the object to be printed on to scrape them. Failure to handle these items with care may cause damage.
  - The print heads may be damaged if allowed to dry out. The machine prevents desiccation automatically, but improper operation may render this feature inoperative. Operate the machine properly, as specified in this manual.
  - Never leave the machine with an ink cartridge removed. Remaining ink in the printer may harden and clog the print heads.
  - Daily maintenance as well as various types of maintenance depending on the status must be performed. Read this manual thoroughly and perform the appropriate maintenance at the appropriate times.
  - The print heads are components that wear out. Periodic replacement is required, with the frequency of replacement depending on use.

## Ink Cartridges

- Ink cartridges come in various types.
  - Use a type that is compatible with the printer. Also, be sure to use only genuine items from Roland DG Corporation.
- Never subject to impact or attempt to disassemble.
  - Never drop the ink cartridges or shake them forcefully. The impact may rupture the internal pouch and cause the ink to leak.
  - Never attempt to disassemble the ink pouches.
  - Never attempt to refill the ink.
  - If ink gets on your hands or clothing, wash it off as soon as possible. Removal may become difficult if you leave such adhered ink untreated.
- Storage
  - Use up the ink before the expiration date printed on the ink cartridge.
  - Store the ink cartridges in a location that is not subject to direct sunlight or strong illumination.
  - Store the ink cartridges unopened in a well-ventilated location at a temperature of 5°C (41°F) or higher and less than 35°C (95°F) and a relative humidity of 20 to 80%RH.

# Basic Maintenance Knowledge

## Types and Timing of Maintenance

To use this machine under its optimal conditions, it is important to perform the appropriate maintenance at the appropriate times.

### Regular Maintenance

These are the maintenance items that are required on a daily basis.

| Timing | Category | Item |
|---|---|---|
| Before daily operations | Maintenance of ink cartridges | P. 135 "Maintenance of Ink Cartridges" |
| | Cleaning of the print heads | P. 136 "Printing Tests and Normal Cleaning" |
| During and after daily operations | Cleaning of the print heads | P. 146 "Head Refreshing Method" |
| | Cleaning the machine | P. 124 "Cleaning the Machine" |
| | Replacing ink cartridges | P. 126 "Replacing Ink Cartridges" |
| When the discharged fluid is ready to overflow | Disposing of discharged fluid | P. 130 "If the Discharged Fluid Disposal Message Appears" |
| | | P. 132 "If the Drain Bottle Exceeds Its Capacity Limit" |
| | | P. 134 "If the Contents of the Drain Bottle Are Not Visible" |
| When dot drop-out or dot displacement occurs | Cleaning of the print heads | P. 146 "Head Refreshing Method" |
| | | P. 136 "Printing Tests and Normal Cleaning" |
| | | P. 151 "Medium Cleaning Method" |
| | | P. 153 "Powerful Cleaning Method" |
| | | P. 158 "Manual Cleaning Method" |
| Once a month | Cleaning of the print heads | P. 158 "Manual Cleaning Method" |
| | Cleaning the UV-LED devices | P. 164 "How to Clean the UV-LED Devices" |

### Advanced Maintenance

These maintenance methods consume a large amount of ink. Thoroughly read the explanation, and then perform the operation at the appropriate point in time.

| Timing | Category | Item |
|---|---|---|
| When the white ink concentration drops | Eliminating drops in ink concentration | P. 168 "Circulating the Ink to Clear Precipitation" |
| When manual cleaning is not effective | Eliminating uneven colors, dot drop-out, and dot displacement | P. 170 "Handling Severe Dot Drop-out with Spot Color Ink" |
| | | P. 174 "Cleaning All Print Heads" |

### Replacing Consumable Parts

These items are for replacement of consumable parts. Thoroughly read the explanation, and then perform the operation at the appropriate point in time.

| Timing | Part name | Item |
|---|---|---|
| When a replacement message appears | Wipers and wiper cleaner | P. 188 "Replacing the Wipers and Wiper Cleaner" |

| Timing | Part name | Item |
|---|---|---|
| Half a year after the start of use | Filter | P. 193 "Replacing the Filter" |
| When the head refresher cleaning pad becomes twisted or falls out | Cleaning pad unit | P. 196 "Replacing the Cleaning Pad Unit" |

**RELATED LINKS**

- P. 197 "Inquiries for Consumable Parts and Products"

## Automatic Maintenance Feature and Notes

This machine has a feature that automatically performs maintenance periodically.

This function performs operations for preventing the print heads from drying out, so:

- **Always keep the main power switched on.**
- **Do not leave the front cover open for a long time.**
- **Return to the top menu after specifying settings in the menus.**

## Alarm Feature

This function reminds you to switch on the sub power once a month.

When the machine remains unused for about a month, this screen appears and a warning buzzer sounds. If this screen appears, switch on the sub power. When maintenance operations finish, switch off the sub power.

This feature operates when the printer's main power is turned on. Leave the main power switched on at all times even when the printer is to remain out of use for a prolonged period.

## Measures When the Printer Is Not in Use for a Prolonged Period

Be sure to follow the instructions shown below when the printer is not in use for a prolonged period.

- **Empty the drain bottle.**

  If you know that you will not use the machine for a prolonged period, empty the drain bottle. When the main power is on, the machine periodically performs automatic maintenance in which fluid is discharged.

  The drain bottle is filled when the following periods elapse. Leaving the drain bottle as-is will lead to the discharged fluid overflowing.

  - Approximately 2 weeks after the message "EMPTY DRAIN BOTTLE" is displayed

    P. 130 "If the Discharged Fluid Disposal Message Appears"

  - Approximately 80 days after the drain bottle is emptied

    P. 132 "If the Drain Bottle Exceeds Its Capacity Limit"

- **Switch the sub power on once every two weeks.**

  Switch the sub power on once every two weeks. When you turn on the power, the machine automatically performs operations such as those to keep the print heads from drying out. Leaving the machine unused for a prolonged period may damage the print heads, so be sure to switch on the power to perform these automatic operations.

  Refresh the heads if a message prompting you to do so is displayed when you switch on the sub power.

  P. 146 "Head Refreshing Method"

- **Keep the machine at a constant temperature and relative humidity.**

  Even when the machine is not in use, keep it at a temperature of 5 to 40°C (41 to 104°F) and a relative humidity of 20 to 80% (with no condensation). Failure to do so may result in malfunction.

# Regular Maintenance


Cleaning the Machine ..... 124
Cleaning the Machine on a Daily Basis ..... 124
Replacing Ink Cartridges ..... 126
Checking for Remaining Ink ..... 126
How to Replace the Ink Cartridge ..... 127
Disposing of Discharged Fluid ..... 129
Precautions for Disposing of Discharged Fluid ..... 129
If the Discharged Fluid Disposal Message Appears ..... 130
If the Drain Bottle Exceeds Its Capacity Limit ..... 132
If the Contents of the Drain Bottle Are Not Visible ..... 134
Maintenance That Must Be Performed Daily ..... 135
Maintenance of Ink Cartridges ..... 135
Printing Tests and Normal Cleaning ..... 136
Head Refreshing Method ..... 146
When Normal Cleaning Is Not Effective ..... 151
Medium Cleaning Method ..... 151
Powerful Cleaning Method ..... 153
Manual Cleaning ..... 157
When Manual Cleaning Is Necessary ..... 157
Manual Cleaning Method ..... 158
Cleaning the UV-LED Devices ..... 163
When UV-LED Device Cleaning Is Necessary ..... 163
How to Clean the UV-LED Devices ..... 164

# Cleaning the Machine

## Cleaning the Machine on a Daily Basis

As part of daily cleaning, wipe away any buildup of ink or grime that has adhered to the machine. In particular, the flat table is likely to have a buildup of grime. Clean by wiping with a cloth moistened by neutral detergent diluted with water then wrung dry.

⚠ WARNING **Never use a solvent such as gasoline, alcohol, or thinner to perform cleaning.**
**Doing so may cause a fire.**

**IMPORTANT**

- This machine is a precision device and is sensitive to dust and dirt. Perform cleaning on a daily basis.
- Never attempt to oil or lubricate the machine.
- Before performing this operation, remove any objects to be printed on.
- To prevent the print heads from drying out, try to finish this procedure in 10 minutes or less. A warning beep sounds after 10 minutes.
- If the warning beep is heard, stop work, close all the covers, and then press [ENTER] to end the manual cleaning mode. After that, restart from the beginning.

### Procedure

**1.** **Remove the object to be printed on.**

**2.** **Move the print-head carriage.**

(1) **Press [MENU].**

(2) **Press [▼] to display the screen shown below.**

(3) **Press [▶] once, and then press [▼] several times to display the screen shown below.**

(4) **Press [▶] to display the screen shown below.**

(5) **Press [MENU].**

After "NOW PROCESSING.." is displayed and the print heads move, the screen shown below appears.

**MEMO**

**Refresh the heads if the following message is displayed.**

(6) **Open the front cover.**

The screen shown below appears.

**IMPORTANT**

Do not press [ENTER] at this stage. Press [ENTER] after cleaning is complete. If you press [ENTER] at this stage, wait for the screen to change as shown in the following figure, and then press [ENTER] again.

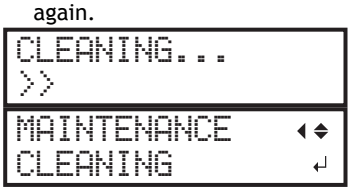


(7) **Touch the location shown in the figure (the area below the ink cartridge slots) to discharge any static electricity.**

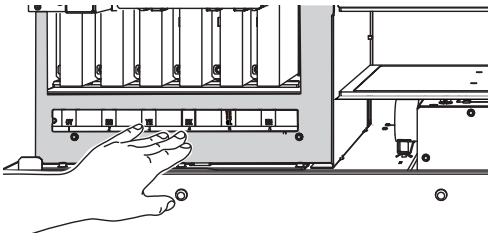

**3.** **Clean the locations shown in the following figure.**

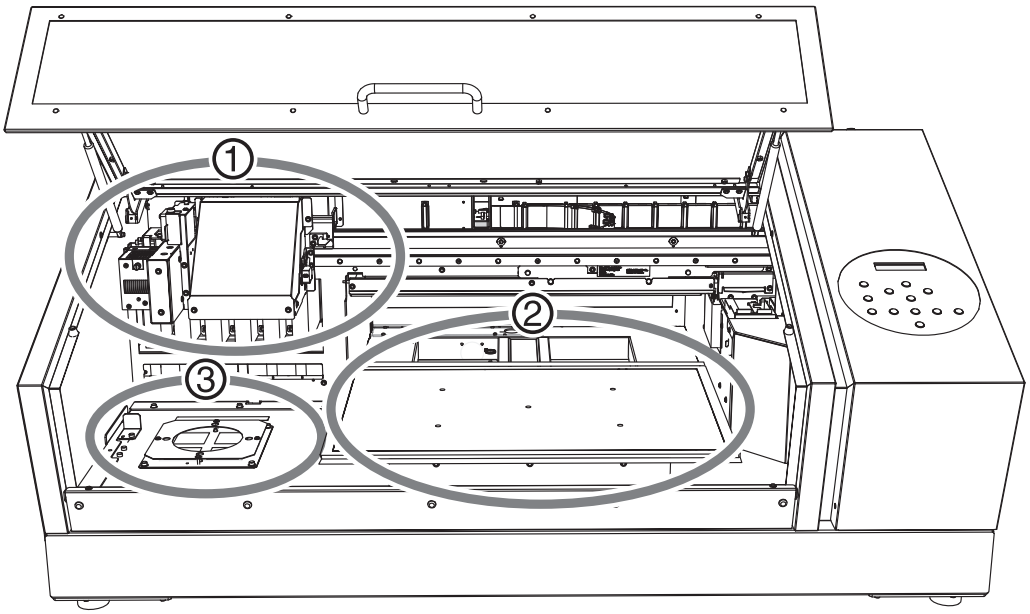


| | | |
|---|---|---|
| ① | UV-LED device, carriage fan, and the surface of the print head carriage | Frequently clean the inside of the machine using a vacuum cleaner or by wiping with a cloth moistened with water then wrung dry. If dust and dirt accumulate in the machine, they are likely to affix to printed materials. |
| ② | Vicinity of the flat table or the object to be printed on | |
| ③ | Vicinity of the inlet of the ventilating equipment | |

**4.** **When you have finished cleaning, close the front cover.**

**5.** **Press [ENTER].**

# Replacing Ink Cartridges

## Checking for Remaining Ink

Printing is paused immediately when an ink cartridge becomes empty (with the default settings). Uneven colors may occur easily if the machine is paused. We recommend that you periodically check the remaining ink.

**Procedure**

1. **Press [MENU].**
2. **Press [▼] several times to display the screen shown below.**

3. **Press [▶].**

   The amount of ink remaining is displayed.

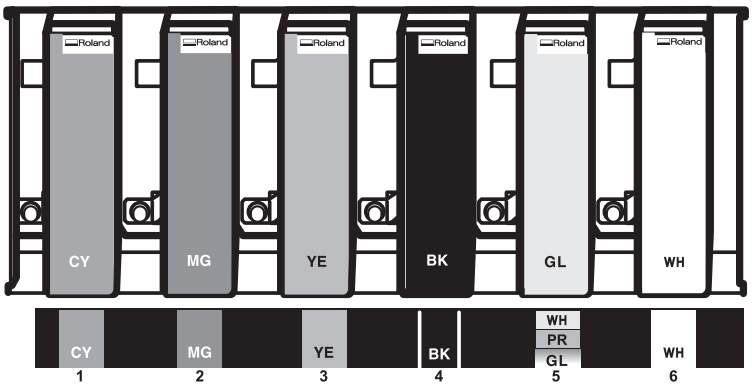


■ indicates the amount of ink remaining. When there are more ■, the amount of ink remaining is larger. The display shows approximately how much ink remains. It may differ somewhat from the actual amount remaining.

4. **Press [MENU], then [◀] to go back to the original screen.**

**MEMO**

If the following message is displayed, ink cartridges must be replaced.

| | |
|---|---|
| 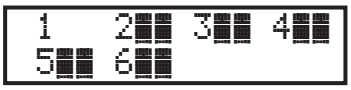 | The numbers of the cartridges that are out of ink flash. |
| | The numbers of the cartridges whose ink has exceeded its shelf life flash. |

**RELATED LINKS**


- P. 127 "How to Replace the Ink Cartridge"
- P. 212 ""1 ■ 2 ■ 3 ■ 4 ■ 5■ 6 ■ 7 ■ 8 ■""
- P. 216 ""INK SHELF LIFE EXPIRE 123456""

## How to Replace the Ink Cartridge

⚠ WARNING **Never store ink, cleaning liquid, or discharged fluid in any of the following locations.**

- **Any location exposed to open flame**
- **Any location where high temperature may occur**
- **Near bleach or any other such oxidizing agent or explosive material**
- **Any location within the reach of children**

**Fire may be a danger. Accidental ingestion by children may pose a health hazard.**

**IMPORTANT**

- Be sure to replace each pouch with an item of identical type and color.
- Never use an ink pouch that has already been used in another machine even if it is an identical type.
- Never mix different types of items.
- Never leave the machine with an ink cartridge removed. The print heads may become clogged.
- Never insert or remove ink cartridges with undue force. Ink may leak.
- Never remove an ink cartridge suddenly while the printer is in operation.

### Procedure

**1.** **Check the number flashing on the screen.**

The ink in the cartridges whose slot numbers are flashing has run out or has exceeded its shelf life.

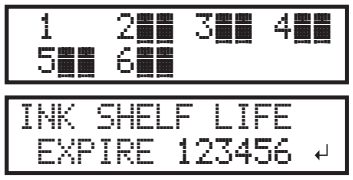


**2.** **Open the front cover.**

**3.** **Shake a new ink cartridge of the same type and color 50 times (about 20 seconds).**

The precipitation of the ingredients in the ink disables printing in normal color. So that the ink mixes well, shake the ink cartridge horizontally with a stroke length of around 5 cm (2 in.) from each end of the ink cartridge.

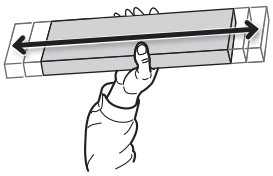

**4.** **Pull out the empty ink cartridge and immediately insert the new one.**

- Insert the cartridge so that the side with the arrow (①) faces up.
- Insert and remove cartridges slowly, one at a time.

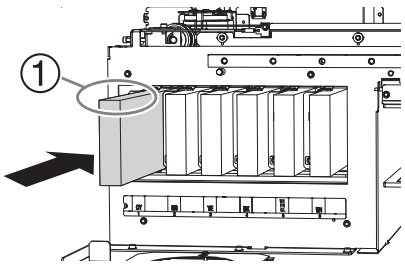

**5.** Close the front cover.

# Disposing of Discharged Fluid

## Precautions for Disposing of Discharged Fluid

⚠ WARNING **Never place discharged fluid or ink near an open flame.**

**Doing so may cause a fire.**

⚠ CAUTION **Before you detach the drain bottle, be sure to wait for the screen to display "EMPTY DRAIN BOTTLE". After discarding the discharged fluid, promptly attach the drain bottle to the machine.**

**Failing to follow this procedure may cause discharged fluid to flow out of the tube and spill, soiling your hands or the floor.**

⚠ CAUTION **To store discharged fluid temporarily, place it in the included drain bottle or in a durable sealed container such as a metal can or polyethylene tank, and cap the container tightly.**

**Any spillage or vapor leakage may cause fire, odor, or physical distress.**

**IMPORTANT**

**Do not store discharged fluid in a location where it is exposed to direct sunlight.**

When temporarily storing discharged fluid in the included drain bottle, do not store it in a location that is exposed to direct sunlight. The discharged fluid may harden, making the drain bottle unusable. The drain bottle may also deteriorate, leading to discharged fluid leaks.

**Dispose of discharged fluid properly, in accordance with the laws in effect in your locale.**

Discharged fluid is flammable and contains toxic ingredients. Never attempt to incinerate discharged fluid or discard it with ordinary trash. Also, do not dispose of it in sewer systems, rivers, or streams. Doing so may have an adverse impact on the environment.

## If the Discharged Fluid Disposal Message Appears

The message appears when a certain amount of discharged fluid has collected in the bottle. If this message appears, dispose of the discharged fluid.

```
EMPTY
   DRAIN BOTTLE↵
```

**Procedure**

1. **When the following message appears, press [ENTER].**

```
EMPTY
   DRAIN BOTTLE↵
```

2. **Open the panel cover.**

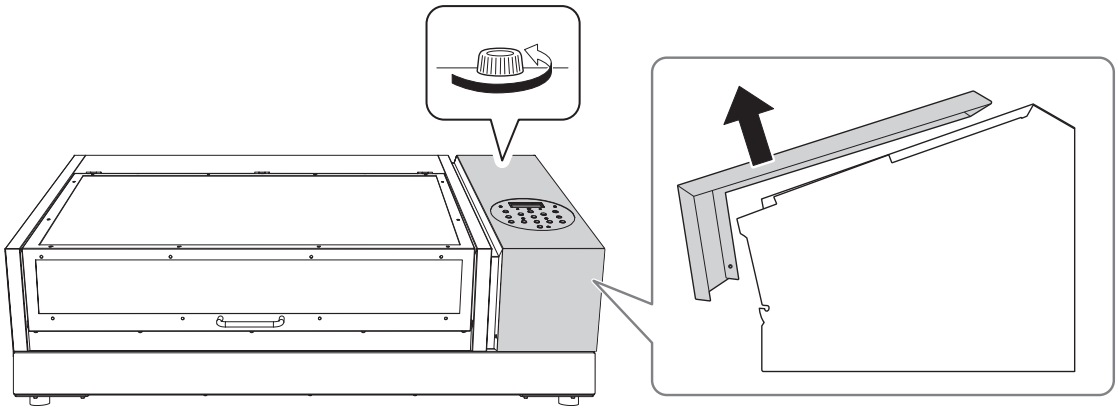

3. **Remove the drain bottle and discard the discharged fluid.**

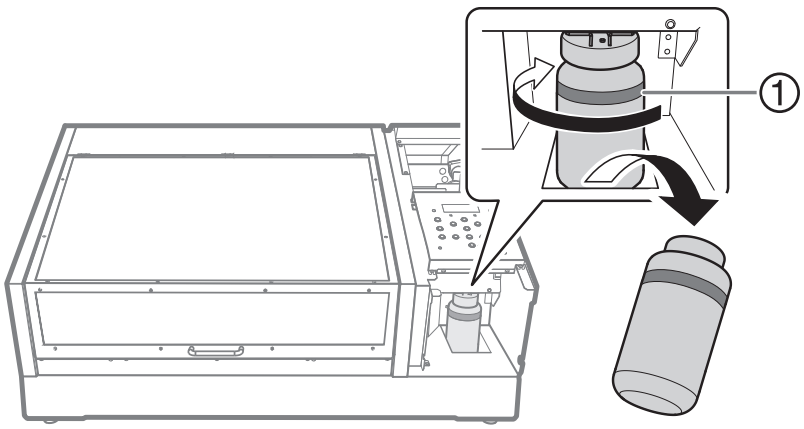


①: Upper limit. Discard the discharged fluid before this line is passed.

**IMPORTANT**

When you remove the drain bottle, a few drops of discharged fluid may come out of the machine. Exercise caution to prevent this fluid from soiling your hands.

4. **Quickly attach the emptied drain bottle to the machine once more.**

5. **Close the panel cover.**

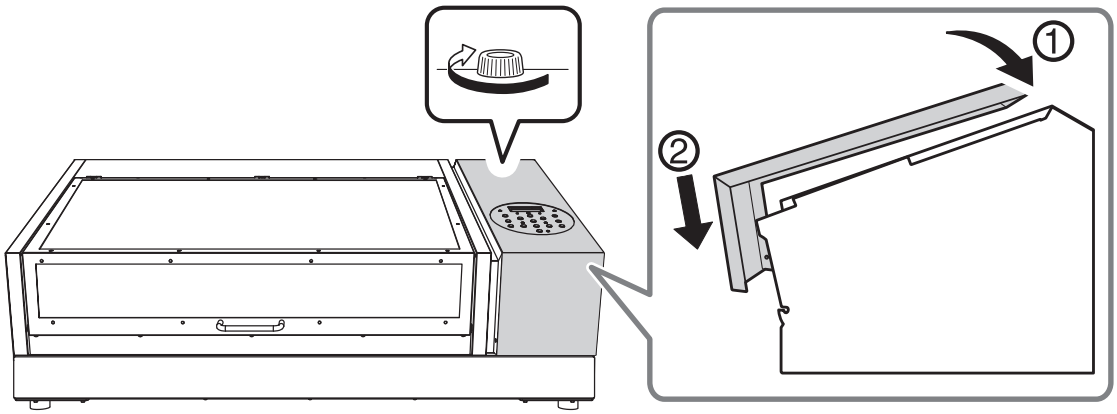


**6.** **Press [◀] or [▶] to select "YES".**

**7.** **Press [ENTER].**

The display returns to the original screen.

**MEMO**

**If you did not discard the discharged fluid and selected "NO"**

The display also returns to the original screen if you did not discard the discharged fluid and selected "NO" In this case the "EMPTY DRAIN BOTTLE" message disappears temporarily. The message appears again once a certain amount of discharged fluid has collected.

⚠ CAUTION **When the message "EMPTY DRAIN BOTTLE" appears on the screen, discard as much of the discharged fluid as possible.**

**Repeatedly selecting "NO" without discarding the discharged fluid may cause it to spill out of the drain bottle, soiling your hands or the floor.**

## If the Drain Bottle Exceeds Its Capacity Limit

The drain bottle collects discharged fluid. You can dispose of discharged fluid even if the message "EMPTY DRAIN BOTTLE" is not displayed on the screen. Discard the discharged fluid before it exceeds the capacity limit of the bottle.

**Procedure**

1. **Press [MENU].**
2. **Press [▼] to display the screen shown below.**

3. **Press [▶] once, and then press [▼] several times to display the screen shown below.**

4. **Press [▶] once, and then press [▼] several times to display the screen shown below.**

5. **Press [ENTER].**
6. **When the following screen is displayed, open the panel cover.**

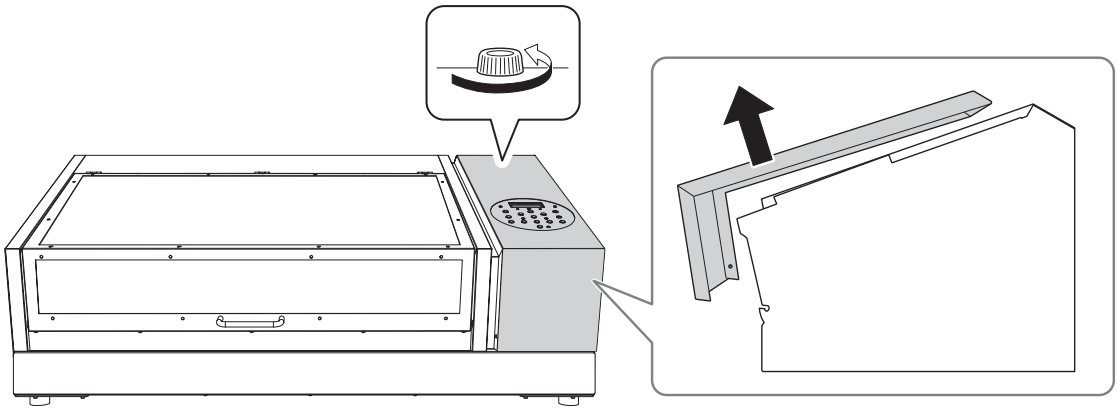

7. **Remove the drain bottle and discard the discharged fluid.**

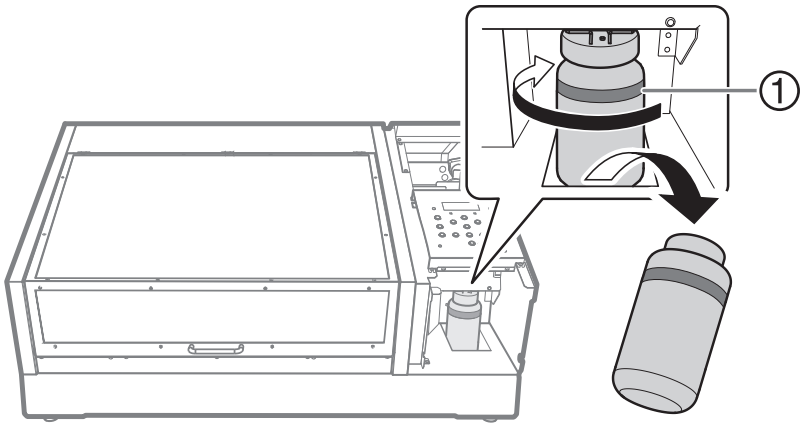


①: Upper limit. Discard the discharged fluid before this line is passed.

**IMPORTANT**

When you remove the drain bottle, a few drops of discharged fluid may come out of the machine. Exercise caution to prevent this fluid from soiling your hands.

**8.** **Quickly attach the emptied drain bottle to the machine once more.**

**9.** **Press [ENTER].**

**10.** **Press [ENTER].**

**11.** **When the following screen is displayed, close the panel cover.**

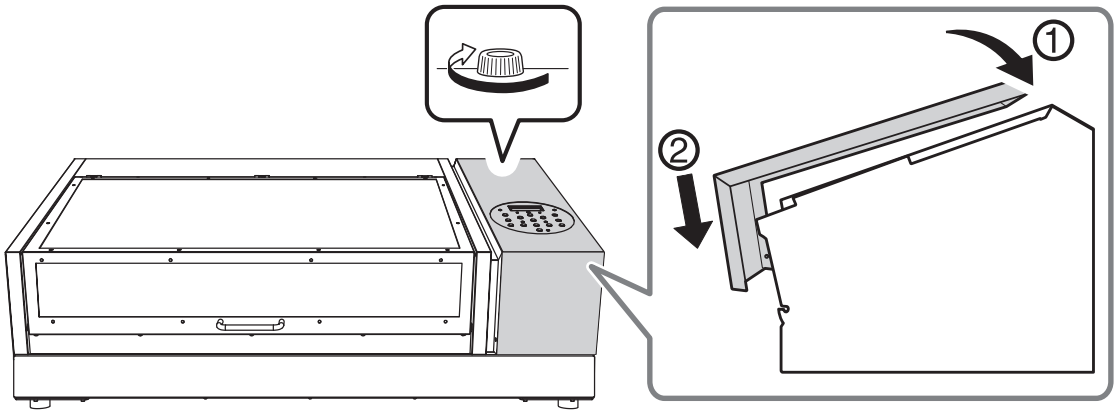


**12.** **Press [MENU], then [◀] to go back to the original screen.**

## If the Contents of the Drain Bottle Are Not Visible

Sometimes, ink affixes to the inside of the drain bottle, which makes it difficult to check the amount of discharged fluid. In this situation, clean the inside of the drain bottle by using one of the following procedures.

**Procedure**

1. **Remove the drain bottle, which you will clean, from the machine.**
2. **Attach another drain bottle (included) to the machine.**
3. **Scrape the inside of the drain bottle clean using one of the included cleaning sticks.**

   Dispose of used cleaning sticks. They cannot be used for any other cleaning.

   If this method is not effective, proceed to the next step.
4. **Dispose of the discharged fluid, leaving about 2 to 3 cm (0.8 to 1.2 inches) of it in the bottom of the bottle.**
5. **Securely cap the drain bottle.**
6. **Gently shake the drain bottle to wet the inside of the bottle with the discharged fluid.**

   Tilt the drain bottle to make the entirety of the inside of the bottle wet.
7. **Stand the bottle upright and leave it for 1 to 2 hours.**

   If inside of the bottle is not cleaned sufficiently of ink stains, repeat steps 4 and 5.
8. **Discard the remaining discharged fluid.**

# Maintenance That Must Be Performed Daily

## Maintenance of Ink Cartridges

The precipitation of the ingredients in the ink disables printing in normal color. So that the ink mixes well, shake the ink cartridge horizontally with a stroke length of around 5 cm (2 in.) from each end of the ink cartridge.

- Remove the white ink cartridge, shake it 50 times (about 20 seconds), and then reinsert this cartridge.
- The ink cartridges for colors other than white do not need to be shaken before every operation, but be sure to shake them when installing new ones.

The ingredients in white ink tend to settle. Each day, before starting the day's operations, be sure to shake this cartridge. Allowing the ink to stand without carrying out these steps can cause the settled material to harden, resulting in malfunction or other problems.

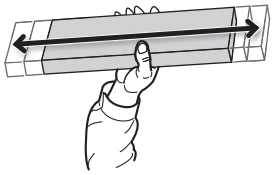

**IMPORTANT**

- Before shaking the ink cartridge, wipe off any ink from around its mouth. If you do not wipe off the ink, it may splatter when you shake the ink cartridge.
- When you have finished mixing the ink, reattach the ink cartridge immediately. Taking time to reattach the ink cartridge will adversely affect the ink path.
- Even if you are not using the printer, shake the white ink cartridge 50 times (about 20 seconds) once a week.

## Printing Tests and Normal Cleaning

- Be sure to perform a printing test before daily operations to check whether normal cleaning is necessary.
- If dot drop-out or dot displacement is present after refreshing the heads and performing a printing test, perform normal cleaning.

### 1. Set the machine so that the print area is set each time the media is set up.

Prevent printing in the incorrect position by specifying the print area each time before setting up the object to be printed on.

**MEMO**

To print in the same position repeatedly, specify "DISABLE" for this setting.

**Procedure**

1. **Press [MENU].**
2. **Press [▼] to display the screen shown below.**

3. **Press [▶] twice to display the screen shown below.**

4. **Press [▲] or [▼] to select "ENABLE".**

5. **Press [ENTER] to confirm your entry.**

## 2. Set the lower-right corner of the object to be printed on to the base printing position.

Set the base printing position (home position) at the front right of the print area. This method is appropriate when the print site is level, and you can clearly specify the print area.

Print area setup can be performed with the front cover open. However, if the front cover is left open for approximately 40 seconds, the print heads automatically return to the home position to prevent the print heads from drying out. The menu returns to the previous one. Repeat the procedure.

**Procedure**

1. **Press [◀].**
2. **Press [▼] twice, and then press [▶] once to display the screen shown below.**

3. **Press [▲] or [▼] to select "LOWER R".**
4. **Press [ENTER] to confirm your entry.**
5. **Press [MENU], then [◀] to go back to the original screen.**

## 3. Attach the object to be printed on for the printing test.

Attach the object to be printed on for the printing test. Use paper for testing (width 90 mm (3.54 in.) × length 70 mm (2.76 in.) or more), not the object that will actually be printed on.

**Procedure**

**1.** **Check that the following screen is displayed.**

If this screen is not displayed, check that nothing has been placed on top of the flat table, and then hold down [SETUP] for 1 second or more.

[SETUP] turns off, and the flat table comes forward.

The above screen appears, and the object to be printed on can be set up.

**2.** **Open the front cover.**

**IMPORTANT**

Be sure to hold the handle of the front cover and open and close it gently.

**3.** **Secure the paper for the printing test.**

Printing tests are used to check that no dot drop-out occurs. Use paper for testing (width 90 mm (3.54 in.) × length 70 mm (2.76 in.) or more), not the object that will actually be printed on.

**MEMO**

There are two types of printing tests. Select the paper to be used based on the features of the given type.

| Type | Features |
|---|---|
| | It is difficult to check the white ink if the paper for use in the printing test is white. We recommend printing on transparent paper. |
| | Because white ink is printed on a black undercoat, white ink can be easily checked even when printed on white paper. However, printing takes longer than "TEST PRINT". |

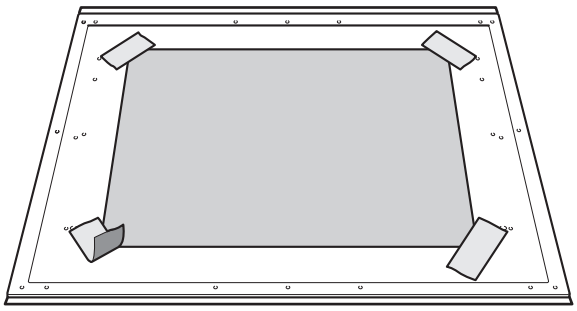

**MEMO**

**Secure the media with tape.**

Secure the media in place using a substance such as commercially available tape affixed directly to the flat table. This method can be used for thin paper and other such media that can be secured with tape only. It can be set anywhere as long as it does not protrude from the top of the flat table. Be aware that folds or kinks in the paper might hit the interior of the printer and cause damage.

**4.** **Close the front cover.**

## 4. The height of the object to be printed on is detected automatically.

The height of the object to be printed on is automatically detected, and the print heads are adjusted to the appropriate height for printing.

**Procedure**

1. **Press [SETUP].**

   [SETUP] starts to flash.

2. **Open the front cover.**

3. **Press [▲], [▼], [UP] or [DOWN] to move the flat table, bringing the highest position of the print surface into contact with the head gap sensor.**

   When the head gap sensor reacts, a buzzer goes off.

   To fine-tune the height, open the front cover and make the adjustments from a close distance.

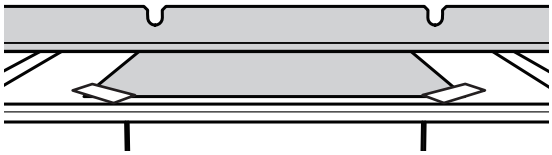

4. **Press [▶] to display the screen shown below.**

   

5. **Close the front cover.**

   **IMPORTANT**

   The following step moves the flat table rearward. If the object to be printed on hits the head gap sensor forcefully, the object to be printed on may be damaged or the head gap sensor may malfunction.

   To re-adjust the height of the object to be printed on, press [◀] and redo the procedure from step 2.

6. **Press [ENTER].**

   The flat table moves and the height of the object to be printed on is detected. The flat table rises while moving backward and forward until the object to be printed on reaches a position where it comes in contact with the head gap sensor.

   When the flat table stops moving and one short beep is heard, the setup is complete.

   The height of the object to be printed on will be set automatically to a position about 1 mm (39.4 mil) away from the print head's ink emission surface.

   **MEMO**

   You can change the distance between the ink emission surface of the print heads and the object to be printed on.

**RELATED LINKS**

• P. 67 "Adjusting the Distance between the Object to Be Printed On and the Print Heads"

## 5. Set the print area.

Set the print area for the printing test. For a printing test, set the print area with a "WIDTH" of 90 mm (3.5 in.) or more and a "LENGTH" of 70 mm (2.8 in.) or more. An error will occur and printing tests cannot be performed if the area is smaller than this.

**Procedure**

**1. Press [▲], [▼], [▶] or [◀] when the following screen appears.**

```
SCAN:     0.0mm
FEED:     0.0mm ↵
```

The flat table and the print heads move so that the pointer points at the previously set printing base position.

**2. Press [▲], [▼], [▶] or [◀] to move the pointer until it points to a position in the right foreground of the print area.**

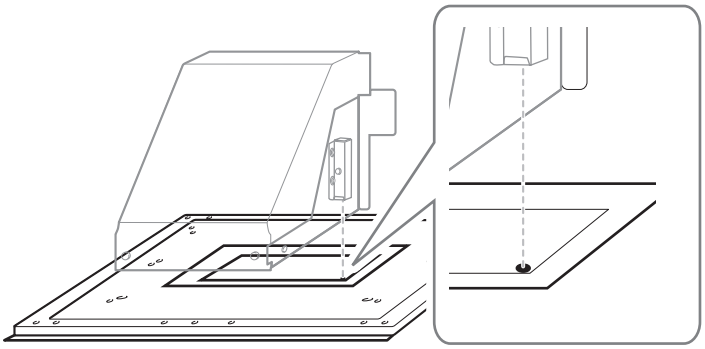

**3. Press [ENTER].**

The print heads return to the home position and the following screen is displayed.

```
WIDTH: XXX.Xmm
LENGTH:XXX.Xmm ↵
```

**MEMO**

- The previously set values are displayed for "WIDTH" and "LENGTH".
- When the object to be printed on comes into contact with the head gap sensor, the setup is canceled and the screen shown below appears. Redo from "5. The height of the object to be printed on is detected automatically.(P. 42)" .

```
CHECK TABLE
       HEIGHT ↵
```

When "CLEARANCE MODE" is set to "RE-ADJ", the setup is not canceled and operation continues.

**4. Press [▲], [▼], [▶] or [◀] to set the "WIDTH" to 90 mm (3.5 in.) or more and the "LENGTH" to 70 mm (2.8 in.) or more.**

The pointer moves until it points to a position in the inner left of the print area.

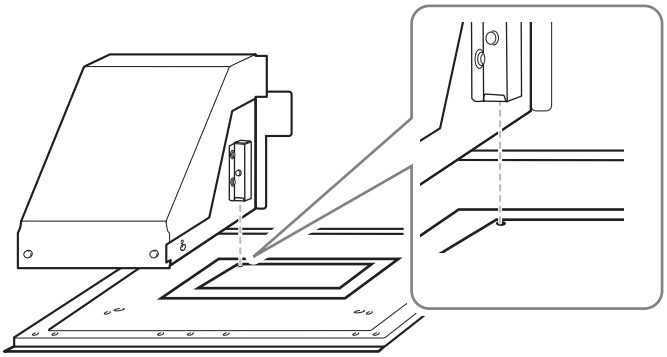

**5.** **Close the front cover when it is open.**

**6.** **Press [ENTER].**

The print area is specified. Print heads return to the standby position.

**7.** **Make sure the "W" ("WIDTH"), "L" ("LENGTH"), and "H" ("HEIGHT") values on the menu screen are as intended.**

**MEMO**

- If you want to use the print area specified here for the next printing operation, switch "SET AT SETUP" to "DISABLE". With this setting, you can set up the object to be printed on without setting the print area and base position.
  P. 91 "Omitting the Setting of the Print Area"
- Automatic return is not possible for a set base printing position (home position). In other words, the setting must be configured again if the base printing position (home position) differs, such as when selecting a new object to be printed on.

## 6. Perform a printing test.

Before you carry out actual printing, perform a printing test to ensure no dot drop-out or dot displacement occurs.

**Procedure**

1. **Before the start of daily operations, remove just the white ink cartridge, shake it 50 times (about 20 seconds), and then reinsert it.**

   So that the ink mixes well, shake the ink cartridge horizontally with a stroke length of around 5 cm (2 in.) from each end of the ink cartridge.

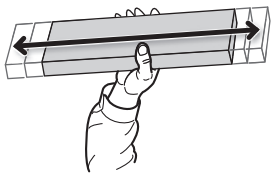

**IMPORTANT**

The ingredients in white ink tend to settle. The precipitation of the ingredients in the ink disables printing in normal color. Allowing the ink to stand without carrying out these steps can cause the settled material to harden, resulting in malfunction or other problems.

2. **Press [FUNCTION].**

3. **Display the printing test menu.**

   - "TEST PRINT"

     Press [▶] to display the screen shown below.

     It is difficult to check the white ink if the paper for use in the printing test is white. We recommend printing on transparent paper.

     ```
     CLEANING        ◀◆
     TEST PRINT       ↵
     ```

   - "TEST PRINT2"

     Press [▶], then [▼] to display the screen shown below.

     Because white ink is printed on a black undercoat, white ink can be easily checked even when printed on white paper. However, printing takes longer than "TEST PRINT".

     ```
     CLEANING        ◀◆
     TEST PRINT2      ↵
     ```

4. **Press [ENTER].**

   Printing of the test pattern starts.

5. **Check whether there is dot drop-out or dot displacement in the test pattern.**

   Missing blocks indicate dot drop-out. Collapsed or inclined blocks indicate dot displacement.

   The following figure shows the "TEST PRINT2" test pattern.

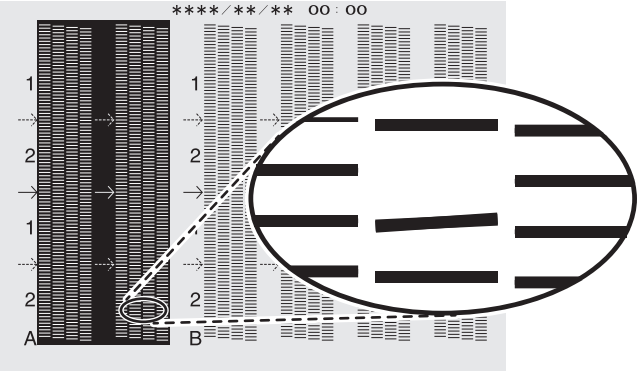


**6.** **If you have opened the front cover, close it.**

If no dot drop-out or dot displacement occurs, this operation is finished. Press [FUNCTION] to go back to the original screen.

**MEMO**

When performing printing tests successively, you can select "FEED" (vertical printing) or "SCAN" (horizontal printing) as the print position for the second and later tests in comparison to the first test.

**RELATED LINKS**

- P. 95 "Performing Printing Tests Arranged Horizontally"

## 7. Performing Normal Cleaning

If, after viewing the results of the printing test, dot drop-out or dot displacement is still present, perform normal cleaning.

**Procedure**

**1. Press [▼] several times to display the screen shown below.**

**2. Check for the group with dot drop-out or dot displacement by viewing the results of the printing test.**

Missing blocks indicate dot drop-out. Collapsed or inclined blocks indicate dot displacement.

The space from "A" to "B" is group A. The space from "B" to the right side is group B.

The following figure shows the "TEST PRINT2" test pattern.

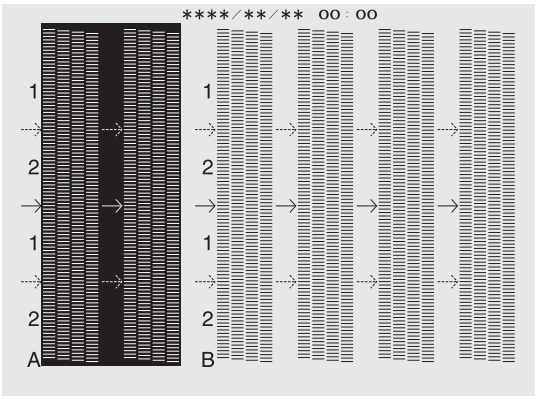


**MEMO**

If the printing-test results are difficult to interpret

Check the results in a bright location, changing your line of vision. They are visible using the reflection of the light.

**3. Press [▶].**

**4. Select the group of print heads to clean.**

(1) **Press [◀] or [▶] to select the group of print heads that is not to be cleaned.**

(2) **Press [▲] or [▼] to get rid of the group display.**

(3) **Repeat steps 1 and 2 to display only the group of print heads that requires cleaning.**

Only the displayed groups will be cleaned. If "AB" is displayed, both groups will be cleaned.

**5. Press [ENTER].**

The screen shown below appears, and then cleaning starts. The (approximate) remaining time for the procedure is displayed on the screen. (The display shown below is an example. "01:45" = "1 minute and 45 seconds")

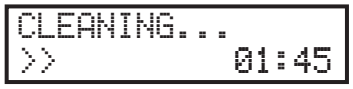


When finished, the screen shown below appears again.

**6.** **Press [◀].**

**7.** **Display the printing test menu.**

- "TEST PRINT"

  Press [▶] to display the screen shown below.

  It is difficult to check the white ink if the paper for use in the printing test is white. We recommend printing on transparent paper.

  

- "TEST PRINT2"

  Press [▶], then [▼] to display the screen shown below.

  Because white ink is printed on a black undercoat, white ink can be easily checked even when printed on white paper. However, printing takes longer than "TEST PRINT".

  

**8.** **Press [ENTER].**

Printing of the test pattern starts.

**9.** **Check to make sure the dot drop-out or dot displacement has been corrected.**

If the problem persists, try performing normal cleaning again. If the printer has been used for a long period, dot drop-outs may not be fixed even after performing normal cleaning two or three times. If this is the case, clean using a different method.

**IMPORTANT**

UV ink will harden. It may adhere to the print head and solidify. If left alone, ink may clog the print heads and cause problems including printer malfunctions. Clean the head manually when printing frequently with the print head at a distance from the print surface. This is called manual cleaning. To prevent clogging of the print heads, you may have to perform manual cleaning each time you print in some cases.

**RELATED LINKS**


- P. 151 "When Normal Cleaning Is Not Effective"
- P. 157 "Manual Cleaning"

## Head Refreshing Method

Head refreshing is an important operation that prevents clogging of the print heads.

Refresh the heads:

- After daily operations.
- When the message "DO HEAD REFRESH" appears.
- When dot drop-out or dot displacement occurs.
- When an emergency stop occurs.
- When switching on the main power and sub power after the main power was previously switched off.

| Required items | | |
|---|---|---|
| 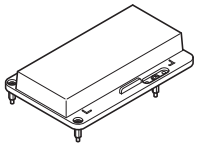 | 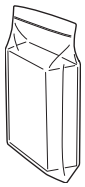 | 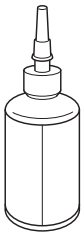 |
| Head refresher | Head cleaning sheet | Cleaning liquid for head refreshing |

**MEMO**

Transfer the cleaning liquid for head refreshing to the bottle for head refreshing.

P. 28 "Preparing the Cleaning Liquid for Head Refreshing"

**IMPORTANT**

Continue using the same head refresher with a single machine. Using a head refresher with multiple machines may lead to print head malfunctions.

**IMPORTANT**

Be sure to hold the handle of the front cover and open and close it gently.

### Procedure

1. **If [SETUP] is lit, hold down [SETUP] for 1 second or more to cancel setup.**

   [SETUP] turns off, and the flat table comes forward.

2. **If the following message is displayed, press [ENTER].**

   If this message is not displayed, start from step 5.

   

3. **Press [◀] or [▶] to select "YES".**

   

   **MEMO**

   Selecting "NO" returns the display to the top menu (or initiates automatic cleaning, depending on the printer status). However, the same message will be displayed once a certain amount of time has passed and in specific situations (such as before the start of manual cleaning and during wiper replacement). Head refreshing is an important operation that keeps the print heads in good condition. Perform this operation with as close to the appropriate timing as possible.

4. **Press [ENTER].**

   Proceed to step 8.

**5.** **Press [FUNCTION].**

**6.** **Press [▶] to display the screen shown below.**

**7.** **Press [ENTER].**

**8.** **When the following screen is displayed, open the front cover.**

**9.** **Check that nothing has been placed on top of the flat table.**

Remove any objects to be printed on and jigs that are present.

**10.** **Attach the head refresher to the flat table in the prescribed location.**

**IMPORTANT**

Be sure to attach the head refresher in this position. Attaching it in the incorrect position may lead to malfunctions caused by the head refresher hitting the print heads.

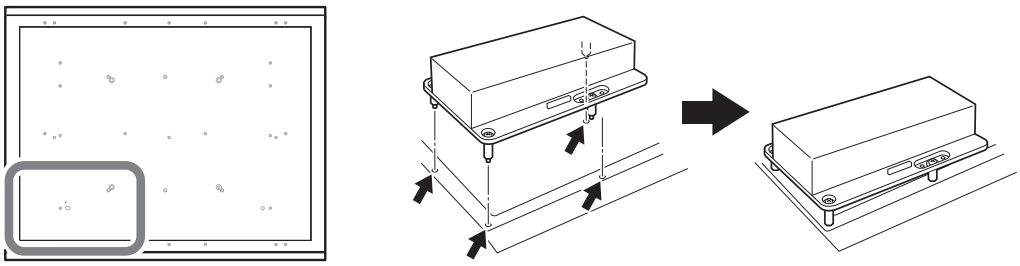

**11.** **Remove the head refresher cover.**

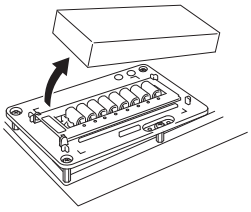

**IMPORTANT**

**Do not place the cover on the flat table.**

The cover being pinched between the head refresher and a part of the machine may lead to malfunctions. To avoid the risk of malfunctions, do not place the cover on the flat table.

**12.** **Attach the head cleaning sheet to the head refresher.**

(1) **Open the sheet retaining cover.**

(2) **Place the head cleaning sheet on the wiping part of the head refresher.**

Place the sheet so that it is aligned with the front position aligning tab (A) and its corners are inside the L-shaped marks.

(3) **Close the sheet retaining cover to secure the head cleaning sheet in place.**

Secure the sheet to prevent it from loosening.

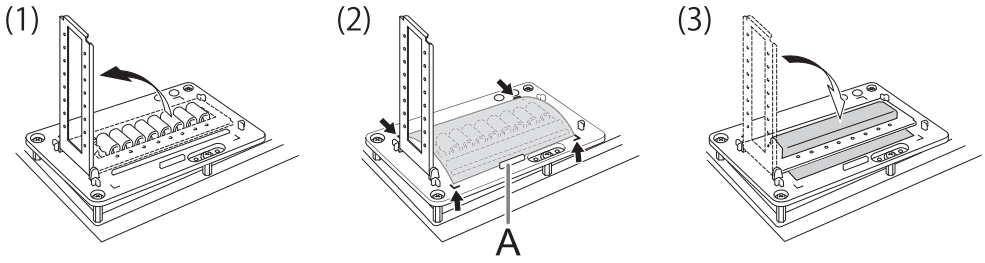


**Point**

To use the head refreshing function to its full effect, make sure that the head cleaning sheet is firmly fixed in place, with no slack. Failing to secure the sheet sufficiently will not only prevent you from obtaining the full effect of head refreshing but may also lead to print head malfunctions.

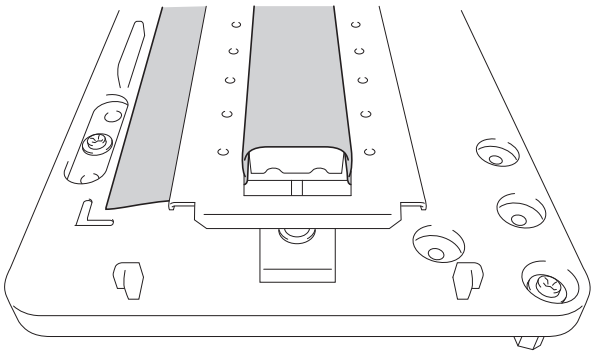

**13.** **Press [ENTER].**

**14.** **When the following screen is displayed, apply head refreshing cleaning liquid to the head cleaning sheet.**

**Point**

- As a guideline, apply 2 drops of cleaning liquid to a single cleaning pad. Apply 1 drop of cleaning liquid in each location, using the holes in the sheet retaining cover (8 holes in the front and 8 holes in the back for a total of 16 holes) as guidelines for the positions where to apply the liquid.
- Soak the cleaning liquid into the entirety of the head cleaning sheet covering the wiping part. Rubbing the print heads with a dry sheet may lead to malfunctions.

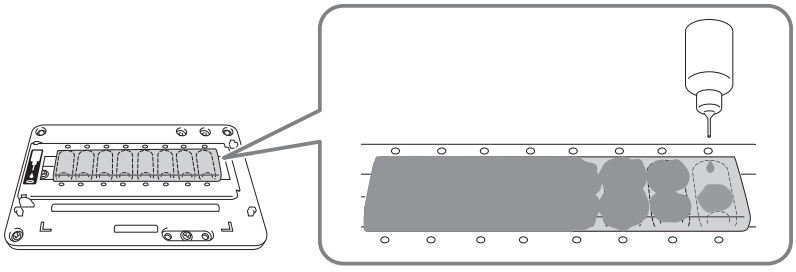

**IMPORTANT**

**Do not leave the bottle of cleaning liquid for head refreshing on the flat table.**

Leaving the cleaning liquid bottle on the flat table and proceeding to the next operation will lead to an error caused by the bottle hitting the head gap sensor.

**15.** **Close the front cover.**

**16.** **Press [ENTER].**

```
APPLY CL-LIQUID◀
START REFRESH  ↵
```

The screen shown below appears, and head refreshing starts. The (approximate) remaining time for the procedure is displayed on the screen. (The display shown below is an example. "01:45" = "1 minute and 45 seconds")

```
CLEANING...
>>          01:45
```

**MEMO**

If the possibility of the print heads hitting the head refresher (or some other obstacle) is detected, head refreshing is canceled and the following message is displayed.

```
CHECK HEIGHT OF
HEAD REFRESHER ↵
```

Press [ENTER] to clear the message.

If the jig is in the way or has not been attached correctly, the head refresher position may be too high. Correctly reattach the head refresher by removing the jig or reviewing how the jig is attached. Then, perform head refreshing again.

**17.** **When the following screen is displayed, open the front cover.**

```
REMOVE HEAD
     REFRESHER ↵
```

**18.** **Open the sheet retaining cover and remove the head cleaning sheet.**

Remove the sheet by pinching parts that are clean of ink and cleaning liquid. Use tweezers or gloves if getting cleaning liquid on your hands seems unavoidable.

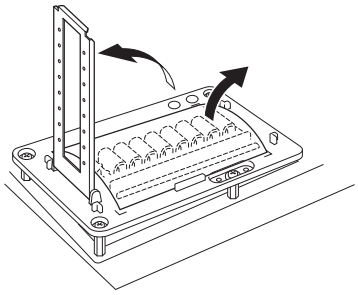

**19.** **Check that there are traces of ink being wiped off onto the head cleaning sheet.**

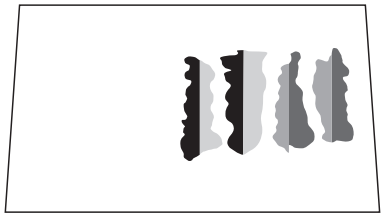

**IMPORTANT**

**Quickly dispose of used head cleaning sheets.**

Leaving a used head cleaning sheet inside the machine may lead to the machine's painting peeling off.

Point

- If there are minor traces of ink being wiped off onto the sheet, head refreshing has failed. Check the following points, and then perform head refreshing again.
  - Has the head cleaning sheet been attached in the correct position?
  - Is the head cleaning sheet loose?
  - Has cleaning liquid soaked into the entirety of the head cleaning sheet?
  - Has too much cleaning liquid been applied? (The appropriate amount is two drops per cleaning pad.)
- Cleaning pads cannot be used if they are severely deformed (warped or tilted) or are coming free of the unit. Replace the cleaning pad unit. For information on replacement, contact your authorized Roland DG Corporation dealer.

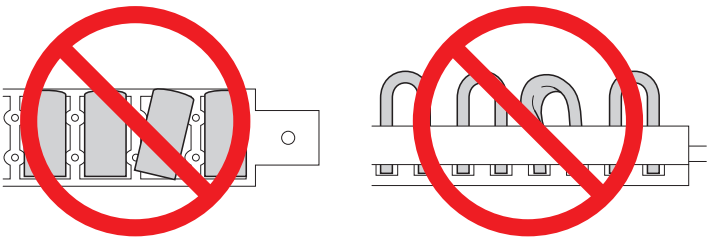

**20.** **Remove the head refresher.**

MEMO

You can place the head refresher in the space on the left side of the machine.

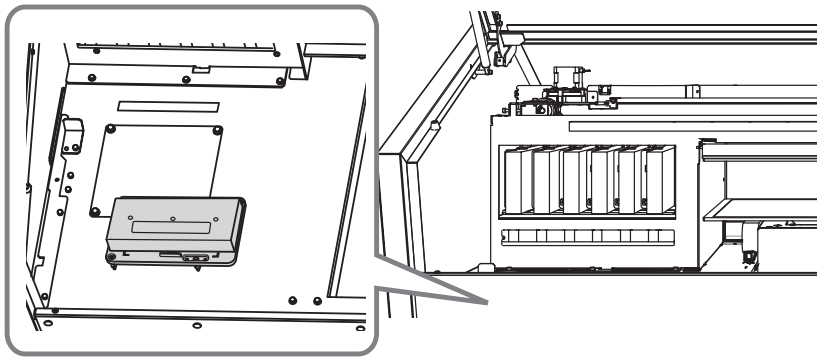

**21.** **Close the front cover.**

**22.** **Switch off the sub power.**

RELATED LINKS

- P. 197 "Inquiries for Consumable Parts and Products"

# When Normal Cleaning Is Not Effective

## Medium Cleaning Method

The print heads are important components that discharge ink. They require periodic and appropriate maintenance. When problems such as dot drop-out are not resolved by normal cleaning, perform the more forceful "medium cleaning" to remove clogging from the print heads.

P. 136 "Printing Tests and Normal Cleaning"

**IMPORTANT**

Medium cleaning consumes more ink than normal cleaning, and overly frequent use may damage the print heads themselves. Avoid performing this operation more than necessary.

### Procedure

1. **Press [FUNCTION].**
2. **Press [▶] once, and then press [▼] several times to display the screen shown below.**

3. **Press [▶] to display the screen shown below.**

4. **Check for the group with dot drop-out or dot displacement by viewing the results of the printing test.**

   Missing blocks indicate dot drop-out. Collapsed or inclined blocks indicate dot displacement.

   The space from "A" to "B" is group A. The space from "B" to the right side is group B.

   The following figure shows the "TEST PRINT2" test pattern.

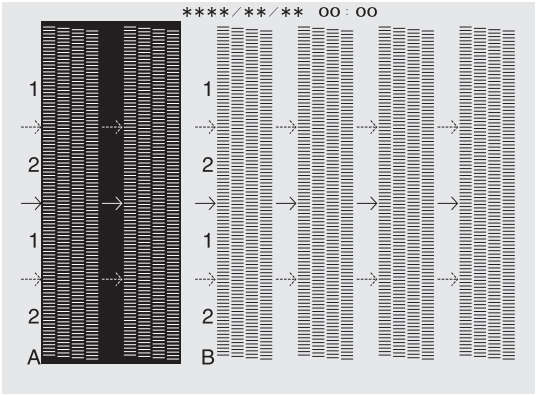


**MEMO**

If the printing-test results are difficult to interpret

Check the results in a bright location, changing your line of vision. They are visible using the reflection of the light.

5. **Select the group of print heads to clean.**

   (1) **Press [◀] or [▶] to select the group of print heads that is not to be cleaned.**

   (2) **Press [▲] or [▼] to get rid of the group display.**

   (3) **Repeat steps 1 and 2 to display only the group of print heads that requires cleaning.**

Only the displayed groups will be cleaned. If "AB" is displayed, both groups will be cleaned.

**6.** **Press [ENTER].**

The screen shown below appears, and then cleaning starts. The (approximate) remaining time for the procedure is displayed on the screen. (The display shown below is an example. "01:45" = "1 minute and 45 seconds")

When finished, the screen shown below appears again.

**7.** **Press [◀].**

**8.** **Display the printing test menu.**

- "TEST PRINT"

  Press [▶] to display the screen shown below.

  It is difficult to check the white ink if the paper for use in the printing test is white. We recommend printing on transparent paper.

  

- "TEST PRINT2"

  Press [▶], then [▼] to display the screen shown below.

  Because white ink is printed on a black undercoat, white ink can be easily checked even when printed on white paper. However, printing takes longer than "TEST PRINT".

  

**9.** **Press [ENTER].**

Perform a printing test again to check whether the dot drop-out and dot displacement have been corrected.

**Point**

- If the problem persists, perform normal cleaning or medium cleaning again.
- If problems such as dot drop-out and dot displacement persist even after you have performed normal cleaning or medium cleaning several times, perform "powerful cleaning."
- This cleaning can be effective when carried out periodically, according to the frequency of use.

**RELATED LINKS**


- P. 136 "Printing Tests and Normal Cleaning"
- P. 153 "Powerful Cleaning Method"

## Powerful Cleaning Method

The print heads are important components that discharge ink. They require periodic and appropriate maintenance. When problems such as dot drop-out are not resolved by medium cleaning, perform the more forceful "powerful cleaning" to remove clogging from the print heads.

P. 151 "Medium Cleaning Method"

**IMPORTANT**

Powerful cleaning consumes more ink than medium cleaning, and overly frequent use may damage the print heads themselves. Avoid performing this operation more than necessary.

### 1. Prepare for powerful cleaning.

After determining the group of print heads on which to perform powerful cleaning, dispose of the discharged fluid to enable the machine to start powerful cleaning.

**Procedure**

1. **Press [FUNCTION].**
2. **Press [▶] once, and then press [▼] several times to display the screen shown below.**

3. **Press [▶] to display the screen shown below.**

4. **Check for the group with dot drop-out or dot displacement by viewing the results of the printing test.**

   Missing blocks indicate dot drop-out. Collapsed or inclined blocks indicate dot displacement.

   The space from "A" to "B" is group A. The space from "B" to the right side is group B.

   The following figure shows the "TEST PRINT2" test pattern.

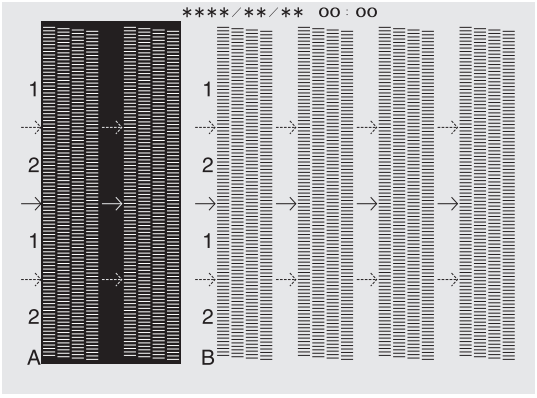


**MEMO**

If the printing-test results are difficult to interpret

Check the results in a bright location, changing your line of vision. They are visible using the reflection of the light.

5. **Select the group of print heads to clean.**

   (1) **Press [◀] or [▶] to select the group of print heads that is not to be cleaned.**

   (2) **Press [▲] or [▼] to get rid of the group display.**

(3) **Repeat steps 1 and 2 to display only the group of print heads that requires cleaning.**

Only the displayed groups will be cleaned. If "AB" is displayed, both groups will be cleaned.

**6.** **Press [ENTER].**

The screen shown below appears.

**MEMO**

**You can press [◀] on this screen to cancel powerful cleaning.**

Powerful cleaning consumes a lot of ink and overly frequent use will damage the print heads. Perform this cleaning only when it is required. If you display this menu by mistake, cancel the operation.

**7.** **Open the panel cover.**

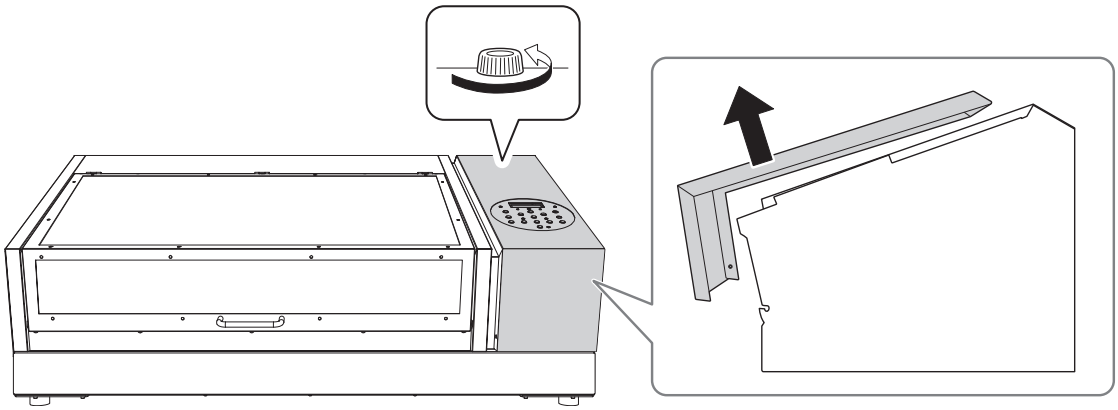

**8.** **Remove the drain bottle and discard the discharged fluid.**

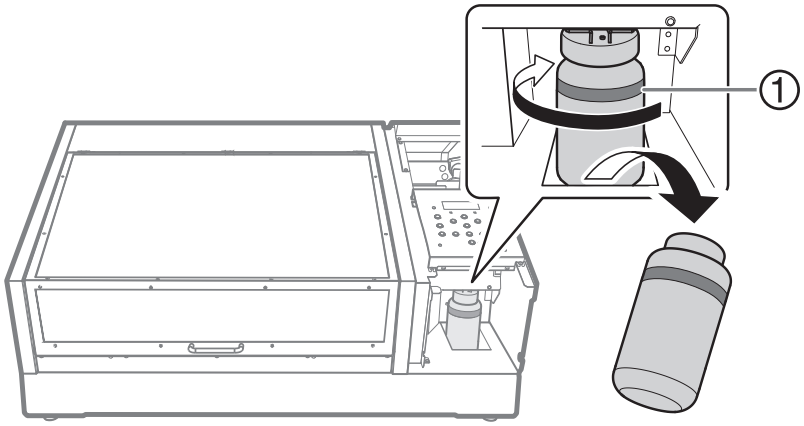


①: Upper limit. Discard the discharged fluid before this line is passed.

**IMPORTANT**

When you remove the drain bottle, a few drops of discharged fluid may come out of the machine. Exercise caution to prevent this fluid from soiling your hands.

**9.** **Quickly attach the emptied drain bottle to the machine once more.**

**10.** **Close the panel cover.**

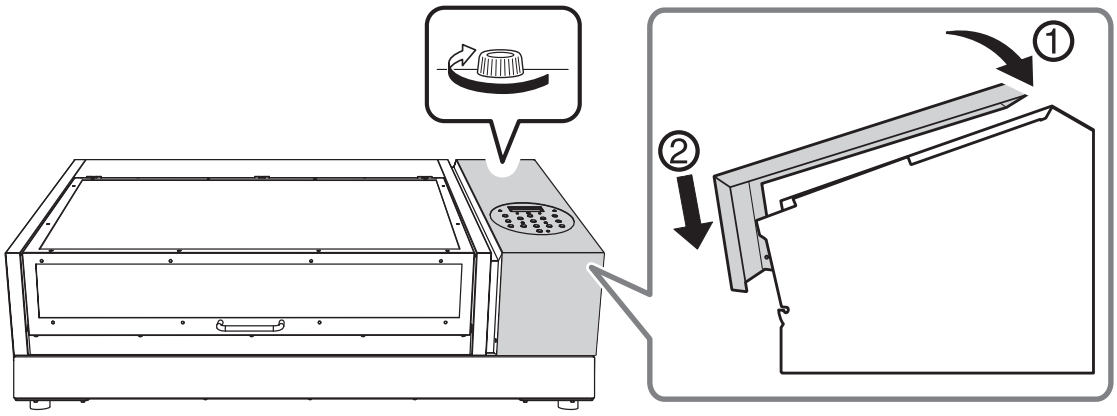
①
②

## 2. Start powerful cleaning.

**Procedure**

**1.** **Press [ENTER].**

**MEMO**

The screen shown below appears, and then cleaning starts. The (approximate) remaining time for the procedure is displayed on the screen. (The display shown below is an example. "01:45" = "1 minute and 45 seconds")

When finished, the screen shown below appears again.

**2.** **Press [◀].**

**3.** **Display the printing test menu.**

- "TEST PRINT"

  Press [▶] to display the screen shown below.

  It is difficult to check the white ink if the paper for use in the printing test is white. We recommend printing on transparent paper.

- "TEST PRINT2"

  Press [▶], then [▼] to display the screen shown below.

  Because white ink is printed on a black undercoat, white ink can be easily checked even when printed on white paper. However, printing takes longer than "TEST PRINT".

**4.** **Press [ENTER].**

Perform a printing test again to check whether the dot drop-out and dot displacement have been corrected.

**MEMO**

- If the problem persists, perform normal, medium, or powerful cleaning again.
- If problems such as dot drop-out and dot displacement persist even after you have performed normal, medium, or powerful cleaning several times, perform "manual cleaning."
- This cleaning can be effective when carried out periodically, according to the frequency of use.

**RELATED LINKS**


- P. 136 "Printing Tests and Normal Cleaning"
- P. 151 "Medium Cleaning Method"
- P. 158 "Manual Cleaning Method"

# Manual Cleaning

## When Manual Cleaning Is Necessary

The print heads are important components that discharge ink. They require periodic and appropriate maintenance. It is important to perform manual cleaning with the appropriate timing.

### When there is a lot of scattered ink mist and the inside of the machine is soiled

Perform this cleaning every day when frequently printing with the print heads at a distance from the print surface or when ink is emitted to locations that protrude from the print surface. If the scattered ink mist is allowed to harden, it may cause malfunctions.

### When a message appears

The following message appears periodically. When this message is displayed, be sure to perform manual cleaning.

### Once a month or more

To keep a stable printing condition at all times, perform manual cleaning once a month or more.

### When symptoms that cannot be improved with powerful cleaning occur

When any of the symptoms given below occur and powerful cleaning is not effective, perform manual cleaning.

| Dot drop-out/Dot displacement | Ink drips | Dragging dirt |
|---|---|---|
| 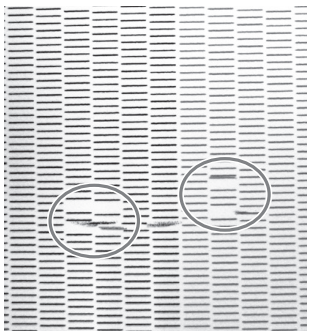 | 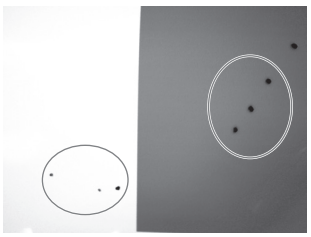 | 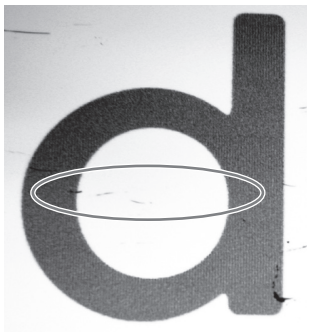 |
| Dust or other foreign matter adheres to the print heads and impedes correct ink discharge. | Ink accumulates on dirty areas around the print heads and drips onto the object to be printed on. | Dirt accumulates on the area around the print heads and touches the object to be printed on. |

**Point**

- The frequency with which manual cleaning should be performed depends on the machine's use. For information about the frequency of cleaning needed for your conditions of use, contact your authorized Roland DG Corporation dealer.
- Wiper replacement may also be effective in improving these symptoms.
- The print heads are components that wear out. Periodic replacement is required, with the frequency of replacement depending on use.

**RELATED LINKS**


- P. 188 "Replacing the Wipers and Wiper Cleaner"
- P. 197 "Inquiries for Consumable Parts and Products"

## Manual Cleaning Method

Perform manual cleaning once per month, if the inside of the machine is dirty due to ink mist, or if dot drop-out or ink drip issues that cannot be improved with powerful cleaning occur.

⚠ WARNING **Be sure to perform operations as specified by the instructions, and never touch any area not specified in the instructions.**
**Sudden movement of the machine may cause injury or burns.**

**IMPORTANT**

**Important notes on this procedure**

- Before performing this operation, remove any objects to be printed on.
- To prevent the print heads from drying out, finish this procedure in 10 minutes or less. A warning beep sounds after 10 minutes.
- Never use any implements other than the included cleaning sticks. Cotton swabs or other lint-producing items may damage the print heads.
- Promptly dispose of cleaning sticks after using them once. Reusing cleaning sticks immediately or after time has passed will have a negative effect on the print heads.
- Do not put a cleaning stick that has been used for cleaning into the cleaning liquid. Doing so will deteriorate the cleaning liquid.
- Never rub the print head surface (nozzle surface).
- Stroke the sponges very gently, applying as little pressure as possible. Never rub, scrape, or crush them.

**If a warning beep sounds during cleaning**

- A warning beep sounds 10 minutes after operation starts. Stop work, close all the covers, and then press [ENTER] to end the manual cleaning mode. After that, restart the procedure from the beginning.

| Required items | |
|---|---|
| | |
| Cleaning sticks | Cleaning liquid |

## 1. Perform manual cleaning.

**Procedure**

1. **Remove the object to be printed on.**
2. **Press [MENU].**
3. **Press [▼] to display the screen shown below.**

4. **Press [▶] once, and then press [▼] several times to display the screen shown below.**

5. **Press [▶] to display the screen shown below.**

6. **Press [ENTER].**

   After "NOW PROCESSING.." is displayed and the print heads move, the screen shown below appears.

**MEMO**

**Refresh the heads if the following message is displayed.**

**7.** **Open the front cover.**

The screen shown below appears.

**IMPORTANT**

Do not press [ENTER] at this stage. Press [ENTER] after cleaning is complete. If you press [ENTER] at this stage, wait for the screen to change as shown in the following figure, and then press [ENTER] again.

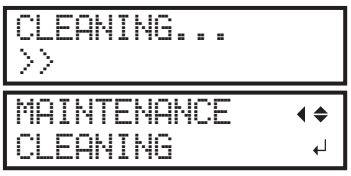


**8.** **Touch the location shown in the figure (the area below the ink cartridge slots) to discharge any static electricity.**

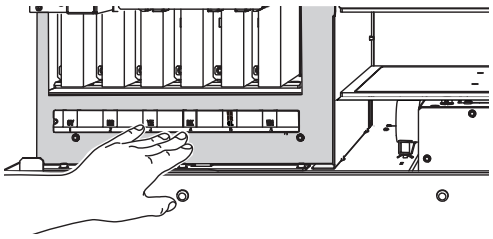

**9.** **Moisten the cleaning stick with the cleaning liquid.**

**IMPORTANT**

Be sure to use one of the included cleaning sticks.

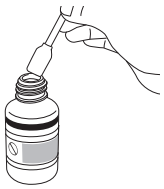

**10.** **Clean the locations shown in the following figure.**

Be especially careful to clean away any fibrous dust (lint).

Be careful not to touch the print head surface (nozzle surface) directly with the cleaning stick.

(1) **Wiper**

(2) **Clean only the metal frame.**

(3) **Focus your cleaning on the frames. Only stroke the sponges gently, do not rub them forcefully.**

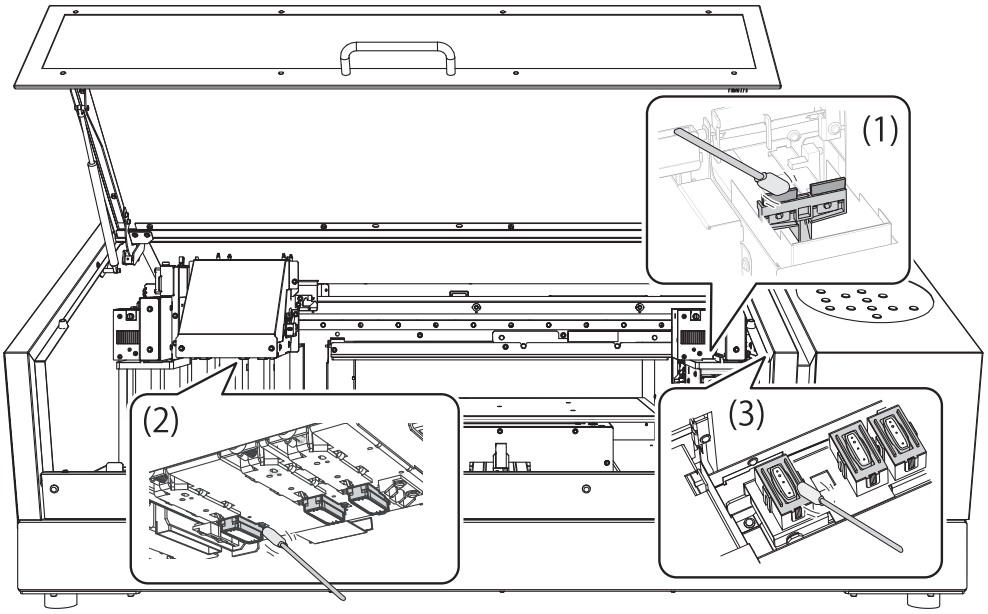


**11.** **When you have finished cleaning, close the front cover.**

**12.** **Press [ENTER].**

```
FINISHED?
                    ↵
```

The screen shown below appears, and then cleaning starts.

```
CLEANING...
>>
```

When the display returns to the following screen, manual cleaning is finished.

```
SETUP MEDIA
```

**RELATED LINKS**

• P. 146 "Head Refreshing Method"

## 2. Perform a printing test to check the results.

**Procedure**

1. **Load the object to be printed on.**
2. **Set the print area.**
3. **Press [FUNCTION].**
4. **Display the printing test menu.**
   - "TEST PRINT"

     Press [▶] to display the screen shown below.

     It is difficult to check the white ink if the paper for use in the printing test is white. We recommend printing on transparent paper.

     

   - "TEST PRINT2"

     Press [▶], then [▼] to display the screen shown below.

     Because white ink is printed on a black undercoat, white ink can be easily checked even when printed on white paper. However, printing takes longer than "TEST PRINT".

     
5. **Press [ENTER].**

   Printing of the test pattern starts.
6. **Check whether there is dot drop-out or dot displacement in the test pattern.**

   Missing blocks indicate dot drop-out. Collapsed or inclined blocks indicate dot displacement.

   The following figure shows the "TEST PRINT2" test pattern.

   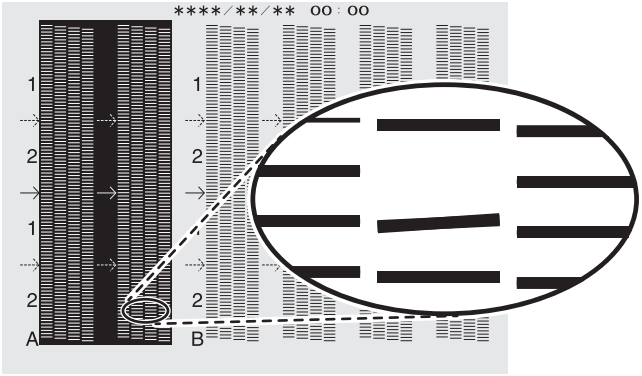
   
7. **If you have opened the front cover, close it.**

   If no dot drop-out or dot displacement occurs, this operation is finished. Press [FUNCTION] to go back to the original screen.

   If dot drop-out or dot displacement is present, perform normal, medium, or powerful cleaning.

**RELATED LINKS**

- P. 136 "Printing Tests and Normal Cleaning"
- P. 151 "Medium Cleaning Method"
- P. 153 "Powerful Cleaning Method"

- P. 197 "Inquiries for Consumable Parts and Products"

# Cleaning the UV-LED Devices

## When UV-LED Device Cleaning Is Necessary

The UV-LED devices are important components for ink adhesion. They require periodic and appropriate maintenance. It is important to clean the UV-LED devices with the appropriate timing.

**Once a month or more**

To keep a stable printing condition at all times, perform cleaning once a month or more.

**When there is a lot of scattered ink mist and the inside of the machine is soiled**

Perform this cleaning every day when frequently printing with the print heads at a distance from the print surface or when ink is emitted to locations that protrude from the print surface. If the scattered ink mist is allowed to harden, it may cause malfunctions.

**When the bases and irradiation windows of the UV-LED devices are dirty (see the following figure).**

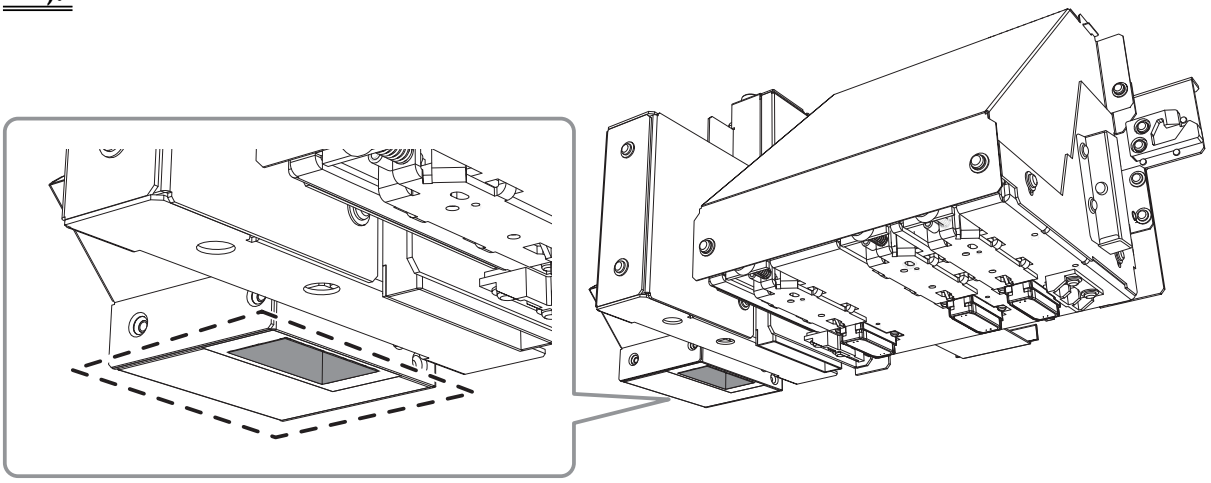

**Point**

- The frequency with which UV-LED device cleaning is required depends on the machine's use. For information about the frequency of cleaning needed for your conditions of use, contact your authorized Roland DG Corporation dealer.
- For hardened ink and other such dirt that cannot be completely cleaned away, contact your authorized Roland DG Corporation dealer.

## How to Clean the UV-LED Devices

**IMPORTANT**

**Important notes on this procedure**

- Before performing this operation, remove any objects to be printed on.
- To prevent the print heads from drying out, finish this procedure in 10 minutes or less. A warning beep sounds after 10 minutes.
- The cloths, alcohol, and similar items used in cleaning are not included with the product.

**When a warning beep sounds during cleaning**

- A warning beep sounds 10 minutes after operation starts. Stop work, close all the covers, and then press [ENTER] to end the manual cleaning mode. After that, restart the procedure from the beginning.

| Required items | | |
|---|---|---|
| 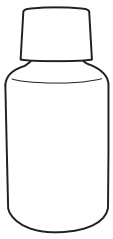 | 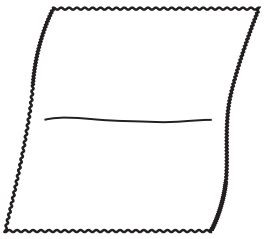 | 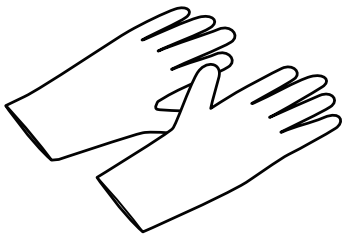 |
| Anhydrous ethanol or isopropyl alcohol | Cloth (that is not fluffy) | Rubber gloves |

⚠ CAUTION **Do not perform cleaning immediately after printing has finished. (Wait approximately 15 minutes after printing finishes.)**
**The area around the UV-LED device is hot and may cause burns.**

⚠ CAUTION **When using anhydrous ethanol or isopropyl alcohol, be sure to follow the product's usage precautions.**
**Exercise caution regarding items such as fire, ventilation, and rashes.**

⚠ CAUTION **Only use anhydrous ethanol or isopropyl alcohol.**
**Using chemicals (or similar substances) other than anhydrous ethanol or isopropyl alcohol may lead to UV-LED device damage.**

⚠ CAUTION **Use cloth that is not fluffy to wipe off the parts. Do not use a hard material such as metal.**
**Using cloth that is fluffy or a hard material such as metal may lead to UV-LED device damage.**

### Procedure

1. **Remove the object to be printed on.**
2. **Move the print-head carriage.**
   (1) **Press [MENU].**
   (2) **Press [▼] to display the screen shown below.**

   

   (3) **Press [▶] once, and then press [▼] several times to display the screen shown below.**

   

   (4) **Press [▶] to display the screen shown below.**

   

   (5) **Press [MENU].**

After "NOW PROCESSING.." is displayed and the print heads move, the screen shown below appears.

**MEMO**

**Refresh the heads if the following message is displayed.**

(6) **Open the front cover.**

The screen shown below appears.

**IMPORTANT**

Do not press [ENTER] at this stage. Press [ENTER] after cleaning is complete. If you press [ENTER] at this stage, wait for the screen to change as shown in the following figure, and then press [ENTER] again.

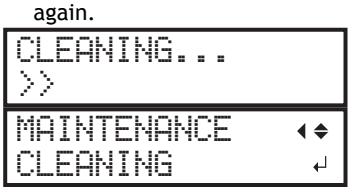


(7) **Touch the location shown in the figure (the area below the ink cartridge slots) to discharge any static electricity.**

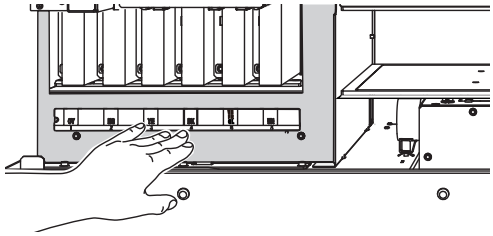

**3.** **Wet a cloth with anhydrous ethanol or isopropyl alcohol, and then wipe off the base and irradiation surface of each UV-LED device with this cloth.**

Wipe the cloth across each UV lamp for approximately 10 round trips until all the dirt is cleared away.

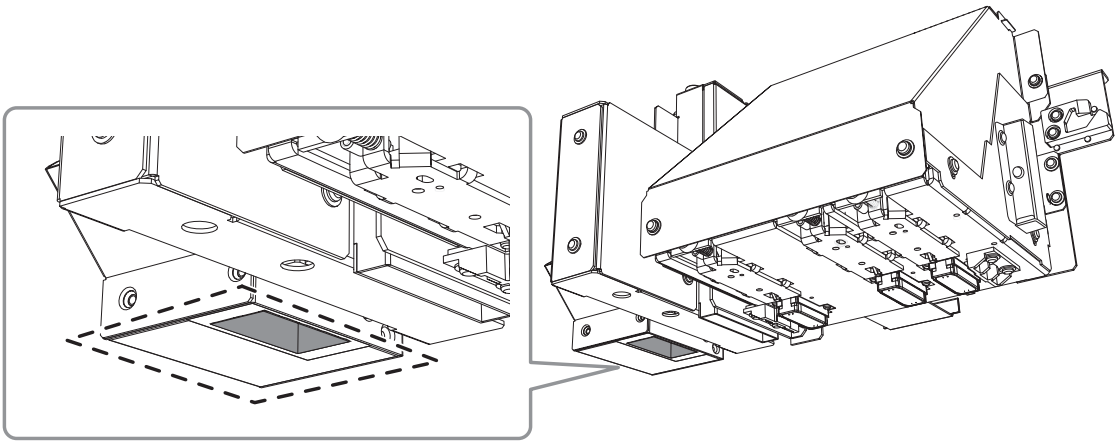

**4.** **When you have finished cleaning, close the front cover.**

**5.** **Press [ENTER].**

The screen shown below appears, and then cleaning starts.

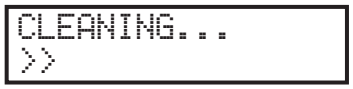


When the following screen is displayed again, UV-LED device cleaning is finished.

**RELATED LINKS**

- P. 146 "Head Refreshing Method"

# Advanced Maintenance

Restoring the White Ink Concentration ..... 168
Circulating the Ink to Clear Precipitation ..... 168
Handling Severe Dot Drop-out ..... 170
Handling Severe Dot Drop-out with Spot Color Ink ..... 170
Cleaning All Print Heads ..... 174
Partially Restricting the Print Heads Used for Printing ..... 176
Emergency Measure) Cleaning the Print Head Surface ..... 186

# Restoring the White Ink Concentration

## Circulating the Ink to Clear Precipitation

Prolonged use of this machine may cause the concentration of the white ink to decrease. This is because white ingredients in white ink easily precipitate. The "CIRCULATE INK" feature circulates the ink to eliminate white ink precipitation, which restores the white ink concentration.

MEMO

This procedure requires some ink to be discharged, so we do not recommend that you perform this procedure frequently.

### Procedure

1. **Open the front cover.**
2. **Remove just the white ink cartridge and shake it 50 times (about 20 seconds).**

   So that the ink mixes well, shake the ink cartridge horizontally with a stroke length of around 5 cm (2 in.) from each end of the ink cartridge.

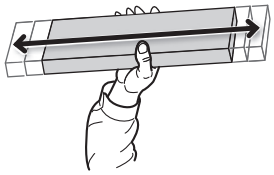

3. **Insert the white ink cartridge.**
4. **Close the front cover.**
5. **Press [MENU].**
6. **Press [▼] to display the screen shown below.**

```
MENU
SUB MENU
```

7. **Press [▶] once, and then press [▼] several times to display the screen shown below.**

```
SUB MENU
INK CONTROL
```

8. **Press [▶] once, and then press [▼] several times to display the screen shown below.**

```
INK CONTROL
CIRCULATE INK
```

9. **Press [▶] to display the screen shown below.**

```
CIRCULATE INK
CIR-DISCHARGE
```

10. **Press [ENTER].**

    Ink circulation starts.

```
CIRCULATING INK
```

MEMO

**Refresh the heads if the following message is displayed.**

When ink circulation finishes, the screen shown below appears again.

**11.** **Press [MENU], then [◀] to go back to the original screen.**

**RELATED LINKS**

- P. 146 "Head Refreshing Method"

# Handling Severe Dot Drop-out

## Handling Severe Dot Drop-out with Spot Color Ink

In this operation, all white ink, gloss ink and primer within the printer is discharged and the interior is cleaned. The white ink, gloss ink, and primer are refilled after cleaning.

This operation requires two SOL INK cleaning cartridges.

If you want to perform maintenance on ink other than white ink, gloss ink and primer, see "Cleaning All Print Heads(P. 174)" .

**MEMO**

White ink tends to settle, and may harden if allowed to stand for a lengthy time. Therefore, abnormal ink emission including dot drop-out tends to occur more frequently than with other inks, even when using the cleaning function (normal, medium, or powerful) or manual cleaning.

**IMPORTANT**

- Be sure to hold the handle of the front cover and open and close it gently.
- A large amount of ink will be discharged during this operation. Perform this operation only when ink emission failures (such as dot drop-out) cannot be improved even after performing "normal," "medium," "powerful," and "manual" cleaning.
- Be sure to use SOL INK cleaning cartridges. Use of any other type may result in breakdown.
- Follow the procedure and fill the machine with ink as soon as possible. Leaving the machine alone without ink may damage the print heads.

**Procedure**

1. **Press [MENU].**
2. **Press [▼] several times to display the screen shown below.**

3. **Press [ENTER].**
4. **Press [ENTER] when the following screen appears.**

5. **Make sure the cleaning liquid is ready.**
6. **When the following screen is displayed, open the panel cover.**

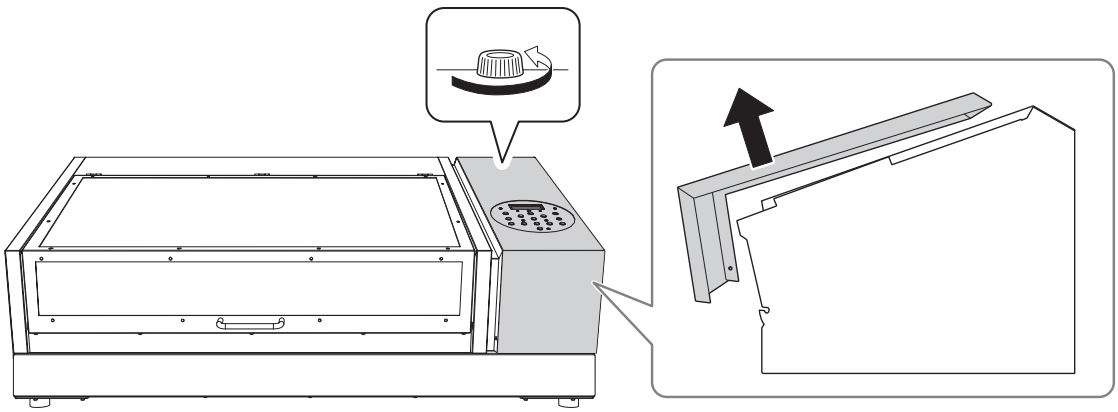

7. **Remove the drain bottle and discard the discharged fluid.**

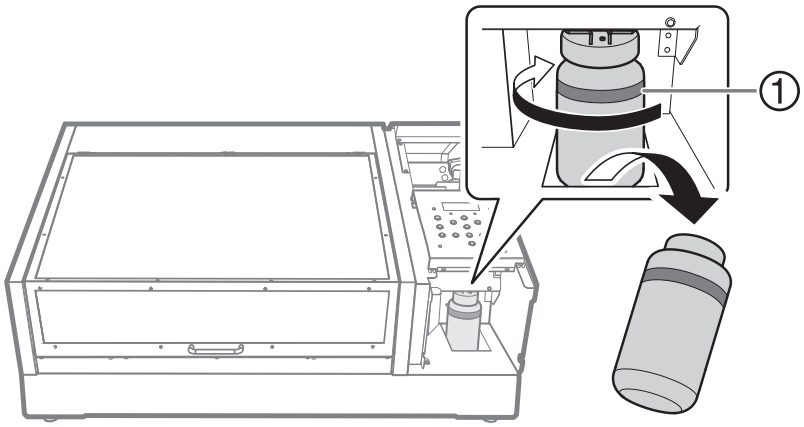


①: Upper limit. Discard the discharged fluid before this line is passed.

**IMPORTANT**

When you remove the drain bottle, a few drops of discharged fluid may come out of the machine. Exercise caution to prevent this fluid from soiling your hands.

**8.** **Quickly attach the emptied drain bottle to the machine once more.**

**9.** **Close the panel cover.**

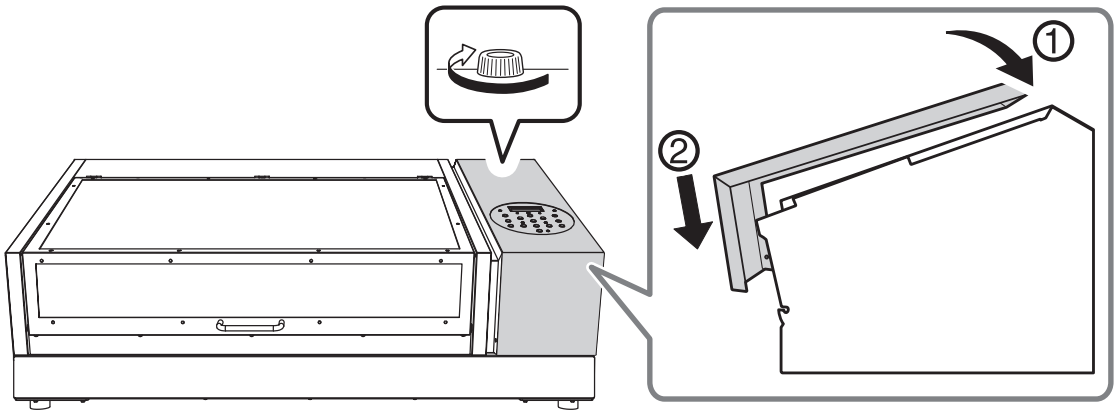


**10.** **Press [ENTER].**

**11.** **Open the front cover.**

**12.** **Remove the ink cartridges from slots 5 and 6, whose numbers are flashing.**

```
REMOVE CARTRIDGE
     123456
```

**13.** **When the screen shown below is displayed, insert SOL INK cleaning cartridges into slots 5 and 6, whose numbers are flashing.**

```
SET CL-LIQUID
     123456
```

The screen shown below appears.

```
RENEWING INK...
>>>>>>
```

**14.** **When the screen shown below is displayed, remove the SOL INK cleaning cartridges from slots 5 and 6, whose numbers are flashing.**

```
REMOVE CL-LIQUID
     123456
```

The screen shown below appears.

```
RENEWING INK...
>>>>>>
```

**15.** **When the screen shown below is displayed, insert ink cartridges into slots 5 and 6, whose numbers are flashing.**

```
SET CARTRIDGE
     123456
```

The screen shown below appears.

```
RENEWING INK...
>>>>>>
```

**16.** **When the following screen is displayed, open the panel cover.**

```
EMPTY          ◀
  DRAIN BOTTLE ↵
```

**17.** **Close the front cover.**

**18.** **Open the panel cover.**

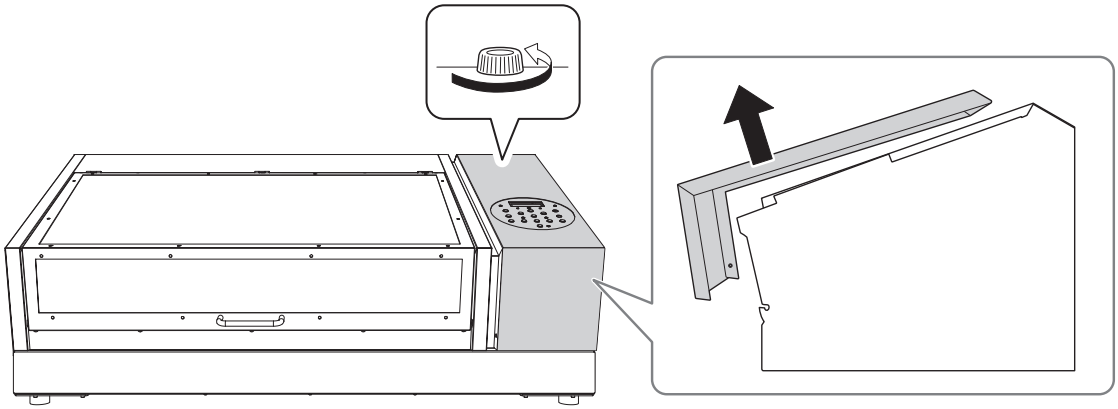

**19.** **Remove the drain bottle and discard the discharged fluid.**

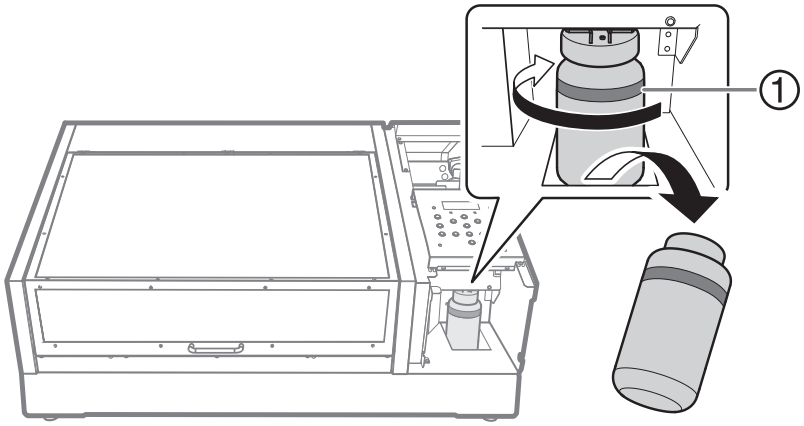


①: Upper limit. Discard the discharged fluid before this line is passed.

**IMPORTANT**

When you remove the drain bottle, a few drops of discharged fluid may come out of the machine. Exercise caution to prevent this fluid from soiling your hands.

**20.** **Quickly attach the emptied drain bottle to the machine once more.**

**21.** **Close the panel cover.**

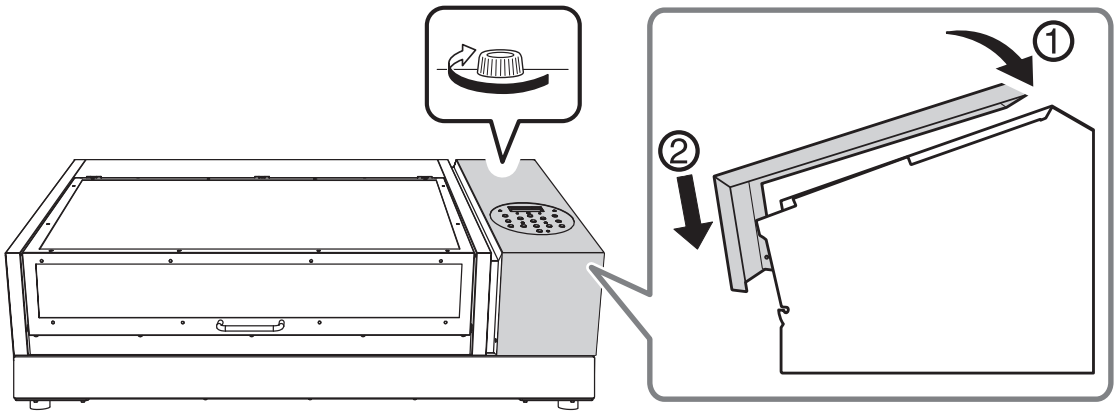


**22.** **Press [ENTER].**

The screen shown below appears again.

**23.** **Press [MENU], then [◀] to go back to the original screen.**

## Cleaning All Print Heads

In this operation, all inks within the printer are discharged, and the interior is cleaned. Ink is refilled after cleaning.

This operation requires six unused SOL INK cleaning cartridges (four for cleaning and two for refilling ink). Have these on hand before you start.

The effect on white ink, gloss ink and primer is the same as "Handling Severe Dot Drop-out with Spot Color Ink(P. 170)" . If you want to perform maintenance only on white ink, gloss ink, and primer, see "Handling Severe Dot Drop-out with Spot Color Ink(P. 170)" .

**IMPORTANT**

- All ink is discharged in this operation. Perform this operation only when ink emission failures (such as dot drop-out) cannot be improved even after performing "normal," "medium," "powerful," and "manual" cleaning.
- Be sure to use SOL INK cleaning cartridges. Use of any other type may result in breakdown.
- Fill the machine with ink as soon as possible after cleaning is finished. Allowing the machine to stand without ink may damage the print heads.

### Procedure

1. **Press [MENU].**
2. **Press [▼] to display the screen shown below.**

```
MENU
SUB MENU
```

3. **Press [▶] once, and then press [▼] several times to display the screen shown below.**

```
SUB MENU
INK CONTROL
```

4. **Press [▶] once, and then press [▼] several times to display the screen shown below.**

```
INK CONTROL
HEAD WASH
```

5. **Press [ENTER].**
6. **Press [ENTER] when the following screen appears.**

```
CLEANING LIQUID
    IS REQUIRED
```

7. **Make sure the cleaning liquid is ready.**
8. **When the following screen is displayed, open the panel cover.**

```
OPEN PANEL
          COVER
```

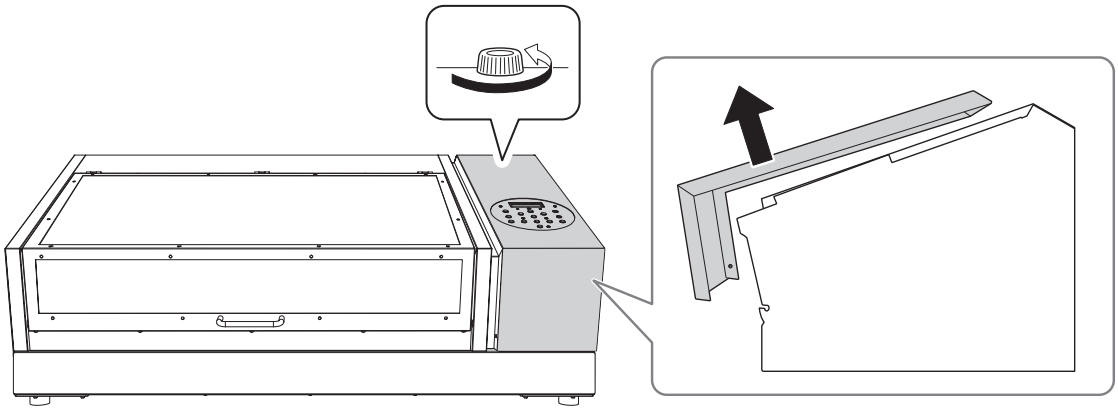

**9.** **Remove the drain bottle and discard the discharged fluid.**

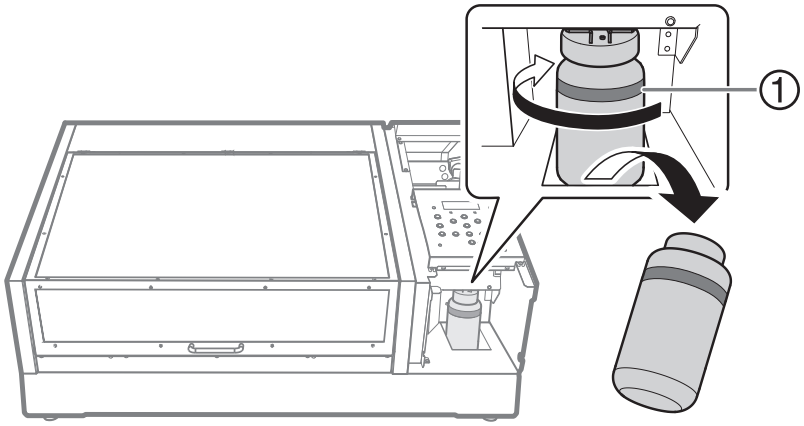


①: Upper limit. Discard the discharged fluid before this line is passed.

**IMPORTANT**

When you remove the drain bottle, a few drops of discharged fluid may come out of the machine. Exercise caution to prevent this fluid from soiling your hands.

**10.** **Quickly attach the emptied drain bottle to the machine once more.**

**11.** **Close the panel cover.**

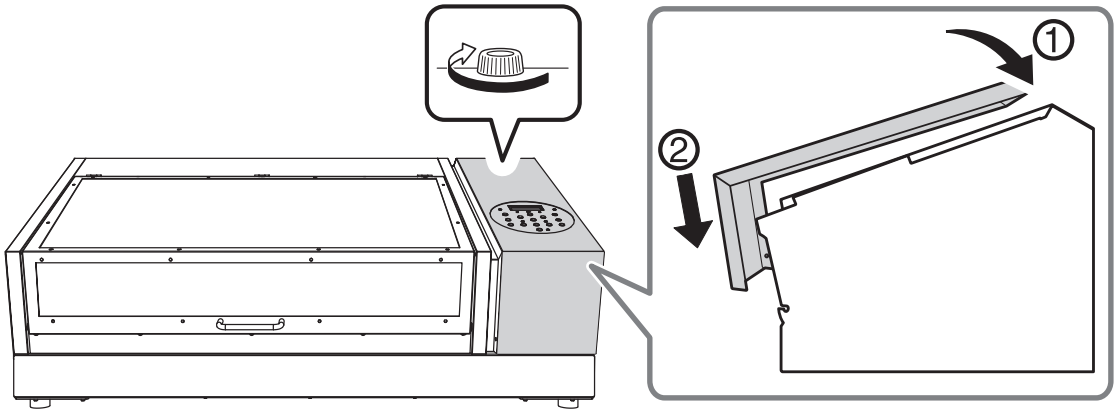


**IMPORTANT**

The following operations will discharge large amounts of fluid. If you do not empty the drain bottle, the discharged fluid may overflow.

**12.** **Press [ENTER].**

The screen shown below appears.

```
WASHING HEAD...
>>>>>
```

**13.** **Thereafter, follow the on-screen instructions to carry out the operations.**

After cleaning has finished, the sub power is automatically switched off.

**14.** **Start filling the machine with ink.**

See the "Setup Guide" and promptly fill the machine with ink. When filling the machine with ink, use (two) SOL INK cleaning cartridges again.

## Partially Restricting the Print Heads Used for Printing

When dot drop-out or dot displacement is not improved even if "INK RENEWAL" and "HEAD WASH" are performed, partially restrict the print heads to use for printing (i.e. prevent the use of the print heads that are causing discharge issues). This operation is called the "nozzle mask," and while it slows down printing speed, it also allows you to decrease the impact of dot drop-out or dot displacement.

First print a test pattern, and then select the nozzle group to use by viewing the test results. After that, use VersaWorks to select the nozzle group used for printing.

### 1. Set the machine so that the print area is set each time the media is set up.

Prevent printing in the incorrect position by specifying the print area each time before setting up the object to be printed on.

**MEMO**

To print in the same position repeatedly, specify "DISABLE" for this setting.

**Procedure**

1. **Press [MENU].**
2. **Press [▼] to display the screen shown below.**

3. **Press [▶] twice to display the screen shown below.**

4. **Press [▲] or [▼] to select "ENABLE".**

5. **Press [ENTER] to confirm your entry.**

## 2. Set the lower-right corner of the object to be printed on to the base printing position.

Set the base printing position (home position) at the front right of the print area. This method is appropriate when the print site is level, and you can clearly specify the print area.

Print area setup can be performed with the front cover open. However, if the front cover is left open for approximately 40 seconds, the print heads automatically return to the home position to prevent the print heads from drying out. The menu returns to the previous one. Repeat the procedure.

**Procedure**

1. **Press [◀].**
2. **Press [▼] twice, and then press [▶] once to display the screen shown below.**

   

3. **Press [▲] or [▼] to select "LOWER R".**
4. **Press [ENTER] to confirm your entry.**
5. **Press [MENU], then [◀] to go back to the original screen.**

## 3. Attach the object to be printed on for the printing test.

Attach the object to be printed on for the printing test. Use paper for testing (width 90 mm (3.54 in.) × length 70 mm (2.76 in.) or more), not the object that will actually be printed on.

**Procedure**

**1.** **Check that the following screen is displayed.**

If this screen is not displayed, check that nothing has been placed on top of the flat table, and then hold down [SETUP] for 1 second or more.

[SETUP] turns off, and the flat table comes forward.

The above screen appears, and the object to be printed on can be set up.

**2.** **Open the front cover.**

**IMPORTANT**

Be sure to hold the handle of the front cover and open and close it gently.

**3.** **Secure the paper for the printing test.**

Printing tests are used to check that no dot drop-out occurs. Use paper for testing (width 90 mm (3.54 in.) × length 70 mm (2.76 in.) or more), not the object that will actually be printed on.

**MEMO**

There are two types of printing tests. Select the paper to be used based on the features of the given type.

| Type | Features |
|---|---|
| | It is difficult to check the white ink if the paper for use in the printing test is white. We recommend printing on transparent paper. |
| | Because white ink is printed on a black undercoat, white ink can be easily checked even when printed on white paper. However, printing takes longer than "TEST PRINT". |

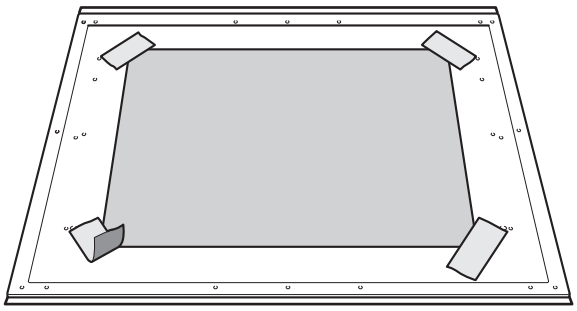

**MEMO**

**Secure the media with tape.**

Secure the media in place using a substance such as commercially available tape affixed directly to the flat table. This method can be used for thin paper and other such media that can be secured with tape only. It can be set anywhere as long as it does not protrude from the top of the flat table. Be aware that folds or kinks in the paper might hit the interior of the printer and cause damage.

**4.** **Close the front cover.**

## 4. The height of the object to be printed on is detected automatically.

The height of the object to be printed on is automatically detected, and the print heads are adjusted to the appropriate height for printing.

**Procedure**

1. **Press [SETUP].**

   [SETUP] starts to flash.

2. **Open the front cover.**

3. **Press [▲], [▼], [UP] or [DOWN] to move the flat table, bringing the highest position of the print surface into contact with the head gap sensor.**

   When the head gap sensor reacts, a buzzer goes off.

   To fine-tune the height, open the front cover and make the adjustments from a close distance.

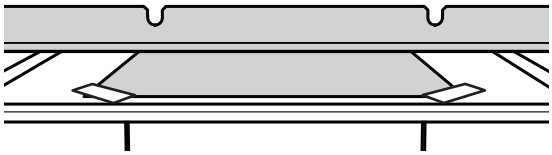

4. **Press [▶] to display the screen shown below.**

5. **Close the front cover.**

   **IMPORTANT**

   The following step moves the flat table rearward. If the object to be printed on hits the head gap sensor forcefully, the object to be printed on may be damaged or the head gap sensor may malfunction.

   To re-adjust the height of the object to be printed on, press [◀] and redo the procedure from step 2.

6. **Press [ENTER].**

   The flat table moves and the height of the object to be printed on is detected. The flat table rises while moving backward and forward until the object to be printed on reaches a position where it comes in contact with the head gap sensor.

   When the flat table stops moving and one short beep is heard, the setup is complete.

   The height of the object to be printed on will be set automatically to a position about 1 mm (39.4 mil) away from the print head's ink emission surface.

   **MEMO**

   You can change the distance between the ink emission surface of the print heads and the object to be printed on.

**RELATED LINKS**

• P. 67 "Adjusting the Distance between the Object to Be Printed On and the Print Heads"

## 5. Set the print area.

Set the print area for the printing test. For a printing test, set the print area with a "WIDTH" of 90 mm (3.5 in.) or more and a "LENGTH" of 70 mm (2.8 in.) or more. An error will occur and printing tests cannot be performed if the area is smaller than this.

**Procedure**

1. **Press [▲], [▼], [▶] or [◀] when the following screen appears.**

```
SCAN:     0.0mm
FEED:     0.0mm ↵
```

The flat table and the print heads move so that the pointer points at the previously set printing base position.

2. **Press [▲], [▼], [▶] or [◀] to move the pointer until it points to a position in the right foreground of the print area.**

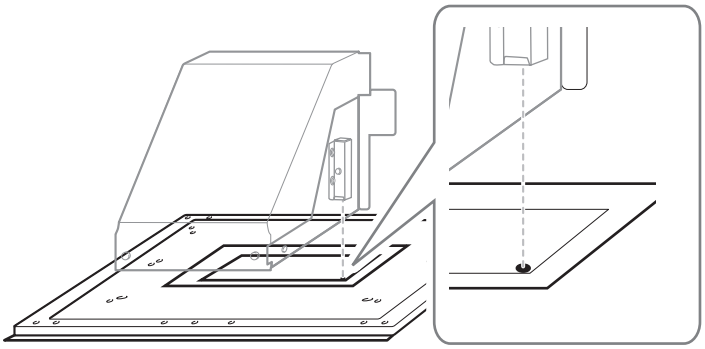

3. **Press [ENTER].**

The print heads return to the home position and the following screen is displayed.

```
WIDTH: XXX.Xmm
LENGTH:XXX.Xmm ↵
```

**MEMO**

- The previously set values are displayed for "WIDTH" and "LENGTH".
- When the object to be printed on comes into contact with the head gap sensor, the setup is canceled and the screen shown below appears. Redo from "4. The height of the object to be printed on is detected automatically.(P. 179)" .

```
CHECK TABLE
      HEIGHT ↵
```

When "CLEARANCE MODE" is set to "RE-ADJ", the setup is not canceled and operation continues.

4. **Press [▲], [▼], [▶] or [◀] to set the "WIDTH" to 90 mm (3.5 in.) or more and the "LENGTH" to 70 mm (2.8 in.) or more.**

The pointer moves until it points to a position in the inner left of the print area.

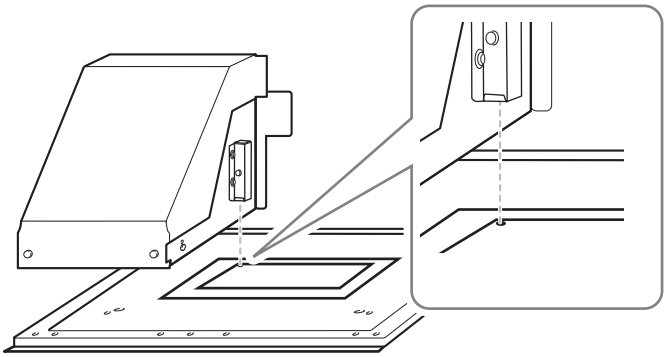

**5.** **Close the front cover when it is open.**

**6.** **Press [ENTER].**

The print area is specified. Print heads return to the standby position.

**7.** **Make sure the "W" ("WIDTH"), "L" ("LENGTH"), and "H" ("HEIGHT") values on the menu screen are as intended.**

**MEMO**

- If you want to use the print area specified here for the next printing operation, switch "SET AT SETUP" to "DISABLE". With this setting, you can set up the object to be printed on without setting the print area and base position.
  P. 91 "Omitting the Setting of the Print Area"
- Automatic return is not possible for a set base printing position (home position). In other words, the setting must be configured again if the base printing position (home position) differs, such as when selecting a new object to be printed on.

## 6. Perform a printing test.

**Procedure**

1. **Before the start of daily operations, remove just the white ink cartridge, shake it 50 times (about 20 seconds), and then reinsert it.**

   So that the ink mixes well, shake the ink cartridge horizontally with a stroke length of around 5 cm (2 in.) from each end of the ink cartridge.

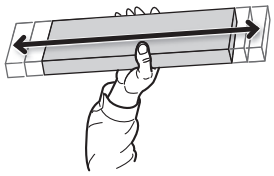

**IMPORTANT**

The ingredients in white ink tend to settle. The precipitation of the ingredients in the ink disables printing in normal color. Allowing the ink to stand without carrying out these steps can cause the settled material to harden, resulting in malfunction or other problems.

2. **Press [FUNCTION].**

3. **Display the printing test menu.**

   - "TEST PRINT"

     Press [▶] to display the screen shown below.

     It is difficult to check the white ink if the paper for use in the printing test is white. We recommend printing on transparent paper.

     ```
     CLEANING        ◀◆
     TEST PRINT       ↵
     ```

   - "TEST PRINT2"

     Press [▶], then [▼] to display the screen shown below.

     Because white ink is printed on a black undercoat, white ink can be easily checked even when printed on white paper. However, printing takes longer than "TEST PRINT".

     ```
     CLEANING        ◀◆
     TEST PRINT2      ↵
     ```

4. **Press [ENTER].**

   Printing of the test pattern starts.

5. **Check whether there is dot drop-out or dot displacement in the test pattern.**

   Missing blocks indicate dot drop-out. Collapsed or inclined blocks indicate dot displacement.

   The following figure shows the "TEST PRINT2" test pattern.

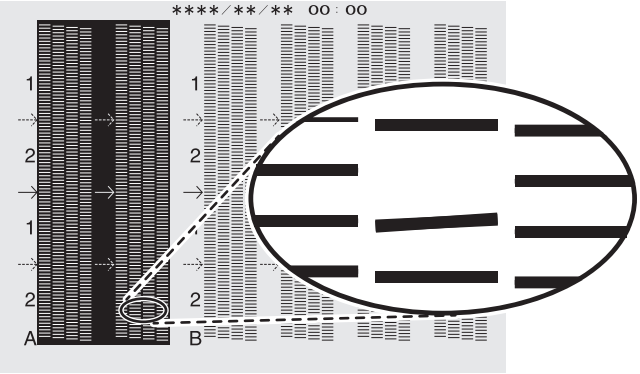


**6.** **If you have opened the front cover, close it.**

If no dot drop-out or dot displacement occurs, this operation is finished. Press [FUNCTION] to go back to the original screen.

**MEMO**

When performing printing tests successively, you can select "FEED" (vertical printing) or "SCAN" (horizontal printing) as the print position for the second and later tests in comparison to the first test.

**RELATED LINKS**

- P. 95 "Performing Printing Tests Arranged Horizontally"

## 7. Limit the print heads used for printing.

**Procedure**

1. **Check for the nozzle group with dot drop-out or dot displacement by viewing the results of the printing test.**

   "1" or "2" is the nozzle group. The following shows a dot drop-out in nozzle group 2.

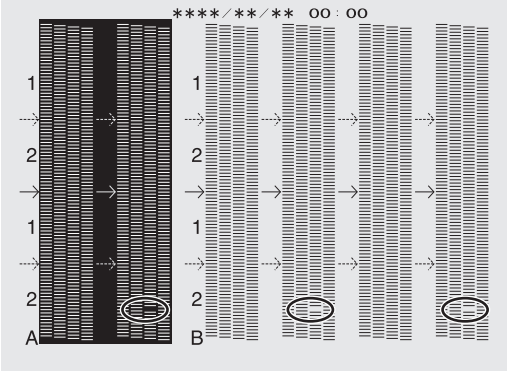


   **MEMO**

   If the printing-test results are difficult to interpret

   Check the results in a bright location, changing your line of vision. They are visible using the reflection of the light.

2. **Start VersaWorks.**
3. **Click [Printer]>[Printer Settings].**

   The [**Printer Settings**] dialog box appears.

4. **From the [Printer List], select the printer whose print heads will be limited.**
5. **Click [Advanced].**

   The [**Advanced**] dialog box appears.

6. **Select the print heads to use in printing from the printing-test results.**

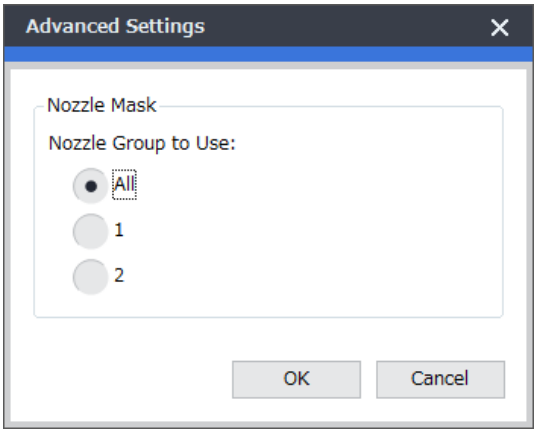


7. **Click [OK].**

   Close the [**Advanced**] dialog box.

8. **Click [OK].**
9. **Close the [Printer Settings] dialog box.**
10. **The icon is displayed on top of the image of the printer whose setting has been changed.**

**RELATED LINKS**

- VersaWorks User's Manual (https://downloadcenter.rolanddg.com/VersaWorks6)

## Emergency Measure) Cleaning the Print Head Surface

When dot drop-out or dot deflection is not improved even if cleaning is performed several times, you can clean the surface of the print heads as an emergency measure. The print head surface (nozzle surface) is a very delicate mechanism, so work must be performed carefully and cautiously.

This operation is an emergency measure. It may damage defect-free parts depending on the symptoms, worsening the symptoms. If you have any questions, contact your authorized Roland DG Corporation dealer.

**Procedure**

1. **Apply a large amount of cleaning solution to the cleaning stick.**
2. **Very gently touch the cleaning stick against the print head surface (nozzle surface).**

   Very softly press the cleaning stick against the print head so that cleaning liquid soaks into the print head surface (nozzle surface). Never rub the stick on the surface or press it forcibly.

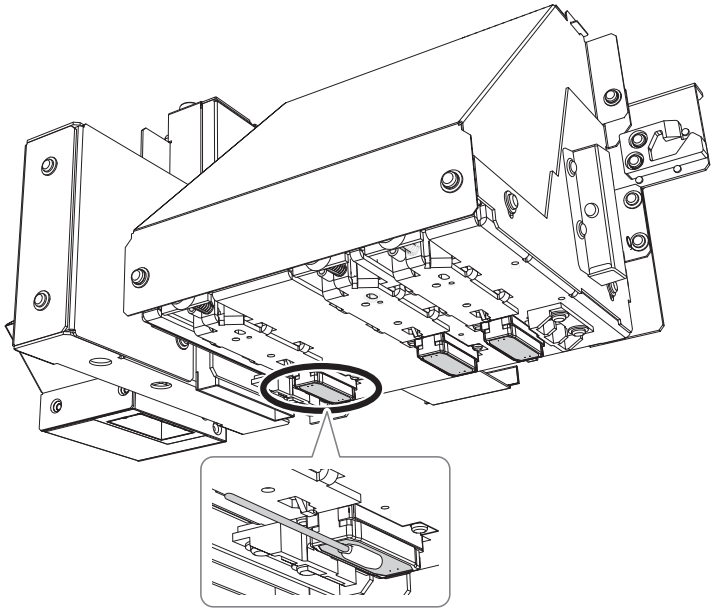

# Replacing Consumable Parts and Products

How to Replace Consumable Parts ..... 188
Replacing the Wipers and Wiper Cleaner ..... 188
Replacing the Filter ..... 193
Replacing the Cleaning Pad Unit ..... 196
Inquiries for Consumable Parts and Products ..... 197
Items That You Can Purchase and Replace by Yourself ..... 197
Items That Require Inquiries before Replacement ..... 197

# How to Replace Consumable Parts

## Replacing the Wipers and Wiper Cleaner

The wipers and wiper cleaner are consumables that you use when cleaning the print heads. They need to be replaced at appropriate intervals.

When the following screen is displayed, it is time to replace the wiper.

⚠ CAUTION **Be sure to perform operations as specified by the instructions, and never touch any area not specified in the instructions.**
**Otherwise sudden movement of the machine may cause injury.**

**IMPORTANT**

- A warning beep sounds 10 minutes after operation starts. If the warning beep is heard, temporarily stop work, close the front cover, and press [ENTER]. Quit the wiper replacement menu. After that, restart the procedure from the beginning.
- Be sure to hold the handle of the front cover and open and close it gently.

| Required items | | | |
|---|---|---|---|
| Included items | | | Commercially available item |
| Wipers (2) | 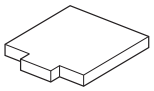 Wiper cleaner | 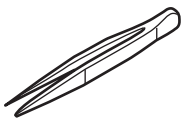 Tweezers | 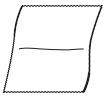 Cloth |

## 1. Replace the wipers.

**Procedure**

1. **Press [ENTER] when the following screen appears.**

2. **Remove the object to be printed on.**
3. **Press [MENU].**
4. **Press [▼] to display the screen shown below.**

5. **Press [▶] once, and then press [▼] several times to display the screen shown below.**

6. **Press [▶], then [▼] to display the screen shown below.**

7. **Press [ENTER].**

After "NOW PROCESSING.." is displayed and the operation for wiper replacement is performed, the screen shown below appears.

MEMO

**Refresh the heads if the following message is displayed.**

**8.** **Open the front cover.**

Preparation is complete once the following screen is displayed.

**9.** **Touch the location shown in the figure (the area below the ink cartridge slots) to discharge any static electricity.**

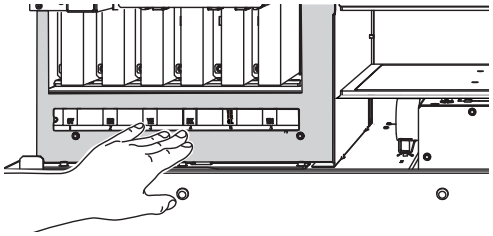

**10.** **Replace the wipers.**

(1) **Detach both of the old wipers.**

Using the tweezers, unhook the wipers, and then pull them up. Using the tweezers to press on the hook in the hole on the wiper makes it easier to remove the wiper.

(2) **Attach both of the new wipers.**

Insert the wipers with the orientation shown in the figure.

Be sure to attach the wipers to the hooks. Failure to do so may result in dot drop-out or other problems.

MEMO

Replace the two wipers at the same time.

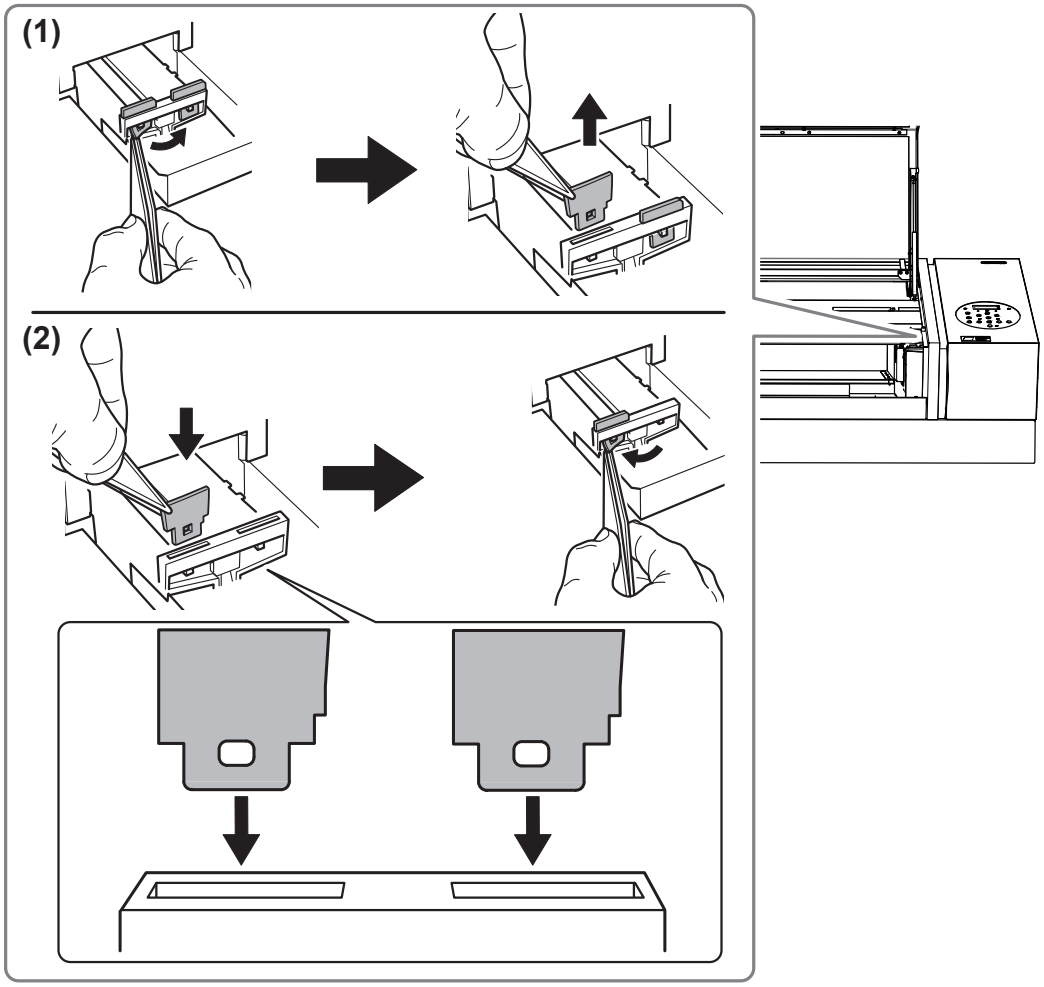


**RELATED LINKS**

- P. 146 "Head Refreshing Method"

## 2. Replace the wiper cleaner.

**Procedure**

**1.** **Remove the wiper cleaner case.**

Hold the right and left sides of the case with your hands and use slight force to pull it out.

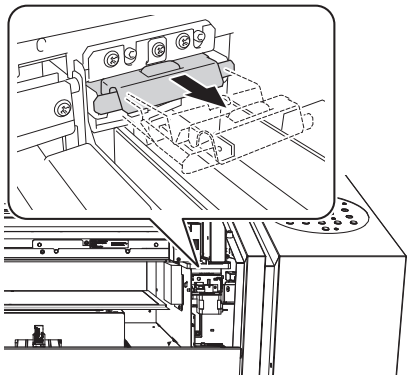

During the replacement, wipe away any buildup of ink around the outlet with a cloth.

**2.** **Replace the wiper cleaner.**

(1) **Remove the old wiper cleaner.**

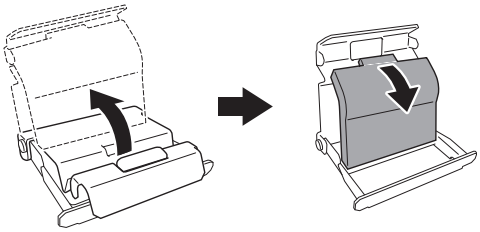

(2) **Attach the new wiper cleaner.**

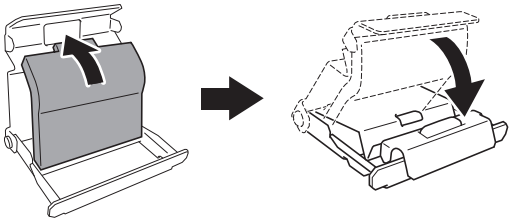

**3.** **Attach the wiper cleaner case.**

Hold the right and left sides of the case and use slight force to push it in.

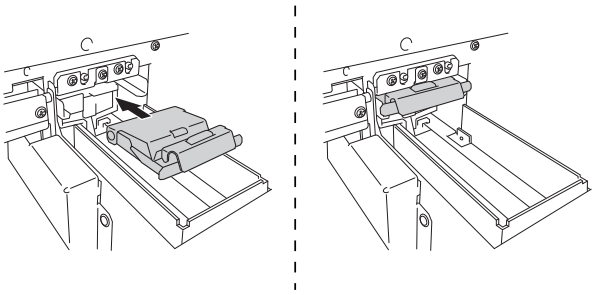

**4.** **Press [ENTER].**

**5.** **When the following screen is displayed, close the front cover.**

Start cleaning.

When the following screen is displayed again, the wiper and wiper cleaner replacement is finished.

**RELATED LINKS**

- P. 197 "Inquiries for Consumable Parts and Products"

## Replacing the Filter

This section explains how to replace the filter used for the mist fan that adjusts scattering of ink mist.

When the screen displays a message like the one shown, it means the item needs to be replaced. Replace with new items.

⚠ CAUTION **Be sure to perform operations as specified by the instructions, and never touch any area not specified in the instructions.**

**Otherwise sudden movement of the machine may cause injury.**

**IMPORTANT**

- A warning beep sounds 10 minutes after operation starts. Stop work and close the front cover. Press [ENTER] to exit the wiper replacement menu. After that, restart the procedure from the beginning.
- Be sure to hold the handle of the front cover and open and close it gently.

### Procedure

1. **Press [ENTER] when the following screen appears.**

   

2. **Remove the object to be printed on.**

3. **Press [MENU].**

4. **Press [▼] to display the screen shown below.**

   

5. **Press [▶] once, and then press [▼] several times to display the screen shown below.**

   

6. **Press [▶] once, and then press [▼] several times to display the screen shown below.**

   

7. **Press [MENU].**

   After "NOW PROCESSING.." is displayed and the operation for filter replacement is performed, the screen shown below appears.

   

   **MEMO**

   **Refresh the heads if the following message is displayed.**

   

8. **Open the front cover.**

   The screen shown below appears.

   

**9.** **Loosen the screw (1) and pull out the filter holder (3) of the carriage mist fan.**

**10.** **Replace the filter (2).**

During the replacement, wipe away any buildup of ink around the outlet with a cloth.

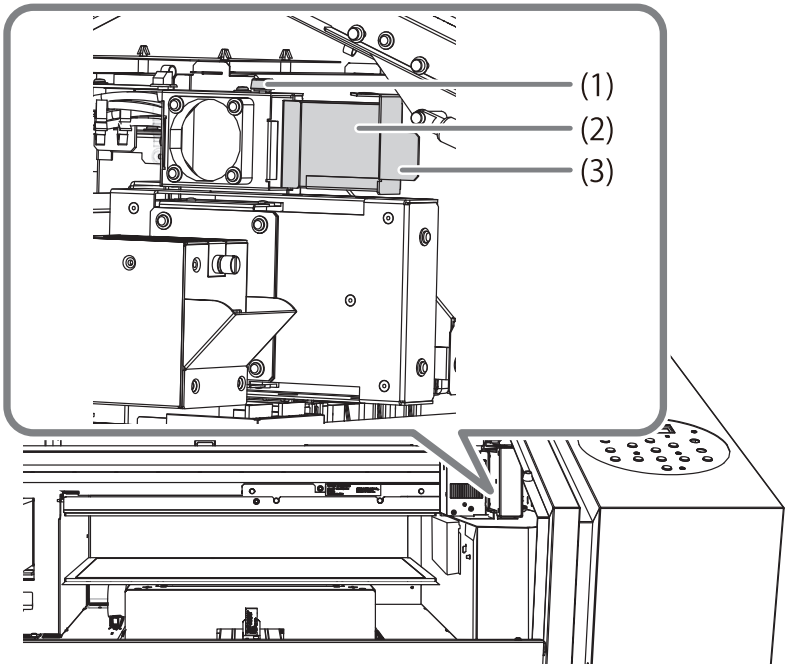


**11.** **Tighten the screw while pushing the filter holder of the carriage mist fan.**

Insert the filter holder completely so that there is no gap in the insertion port.

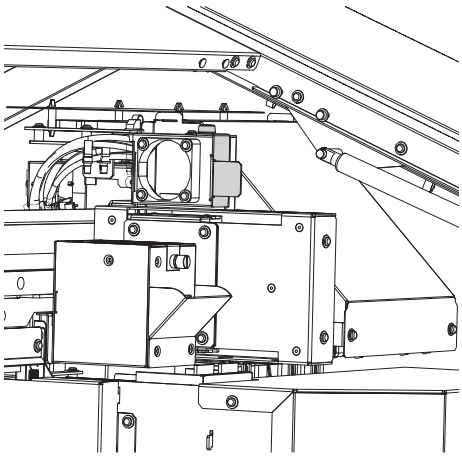

**12.** **Press [ENTER].**

**13.** **When the following screen is displayed, close the front cover.**

```
CLOSE FRONT
      COVER↵
```

**14.** **Press [ENTER].**

Start cleaning.

When the following screen is displayed again, the filter replacement is finished.

```
SETUP MEDIA
```

**RELATED LINKS**

- P. 146 "Head Refreshing Method"
- P. 197 "Inquiries for Consumable Parts and Products"

## Replacing the Cleaning Pad Unit

Replace the cleaning pad unit for the head refresher whenever necessary.

Replace the cleaning pad unit in the following cases. Continued use of the product in this state may prevent effective head refreshing and cause print head malfunctions.

- **After half a year from starting use**
- **When the cleaning pad is excessively distorted (warped or tilted) or when it gets pulled out**

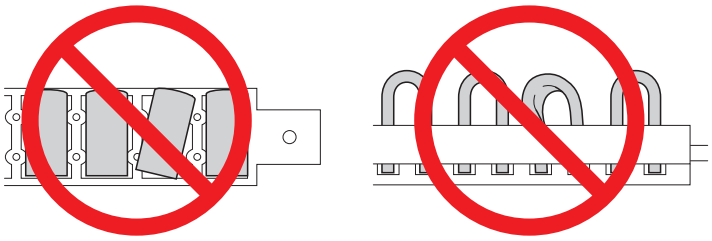

For information on replacement, contact your authorized Roland DG Corporation dealer.

**RELATED LINKS**


- P. 197 "Inquiries for Consumable Parts and Products"

# Inquiries for Consumable Parts and Products

## Items That You Can Purchase and Replace by Yourself

To purchase the following consumable parts or products, contact your authorized Roland DG Corporation dealer or visit our website (http://www.rolanddg.com/).

| Item | Related page |
|---|---|
| Wiper | P. 188 "Replacing the Wipers and Wiper Cleaner" |
| Wiper cleaner | |
| Filter | P. 193 "Replacing the Filter" |
| Cleaning sticks | P. 157 "Manual Cleaning" |
| Cleaning liquid | |
| Head cleaning sheet | P. 146 "Head Refreshing Method" |
| Cleaning liquid for head refreshing | |

## Items That Require Inquiries before Replacement

When replacing the following consumable parts, contact your authorized Roland DG Corporation dealer.

| Item | Related page |
|---|---|
| Print heads | P. 157 "Manual Cleaning" |
| Cleaning pad unit | P. 196 "Replacing the Cleaning Pad Unit" |

# Troubleshooting Methods

# Print Quality Problems


Printed results are coarse or contain horizontal stripes ..... 200
- Do the print heads cause dot drop-out? ..... 200
- Are the software RIP settings appropriate? ..... 200
- Is the printer installed in a level and stable location? ..... 200
- Is the printer installed in a location that is not exposed to direct sunlight? ..... 200
- Is the object to be printed on loaded and set up correctly? ..... 200

The Object to be Printed on Becomes Soiled When Printed ..... 201
- Are the print heads dirty? ..... 201
- Is the humidity of the room too low? ..... 201

Colors are unstable or uneven ..... 202
- Did you shake the ink cartridges before installing them? ..... 202
- Has the printer been used continuously for a long time? ..... 202
- Was printing paused partway through? ..... 202
- Is the printer installed in a level and stable location? ..... 202
- Is the printer set to pause during printing for cleaning? ..... 202
- Is the printer being used in a location subject to severe changes in the operating environment? ..... 202
- Are the settings for the "PRESET" menu item appropriate? ..... 202

# Printed results are coarse or contain horizontal stripes

## Do the print heads cause dot drop-out?

If dot drop-out or dot displacement is present, perform head refreshing.

After performing head refreshing, carry out a printing test and make sure no dot drop-out or dot displacement occurs. If dot drop-out or dot displacement is still present, perform normal cleaning.

**RELATED LINKS**

- P. 146 "Head Refreshing Method"
- P. 136 "Printing Tests and Normal Cleaning"
- P. 151 "When Normal Cleaning Is Not Effective"

## Are the software RIP settings appropriate?

Try using the optimal print mode on software RIP. Specific combinations of the object to be printed on and print mode may cause the colors to be uneven, and results may also vary greatly depending on the color-profile selection. Select settings appropriate for the object to be printed on.

## Is the printer installed in a level and stable location?

Never install the machine in a location where it is tilted or where it may wobble or experience vibration. These factors may lead to dot-dropout or reduced printing quality.

## Is the printer installed in a location that is not exposed to direct sunlight?

Never install the machine in a location that is exposed to direct sunlight. Doing so may result in dot drop-out or other problems with reduced printing quality, or may even result in malfunction.

## Is the object to be printed on loaded and set up correctly?

If the object to be printed on is not loaded correctly, printing may be adversely affected. Make sure the object to be printed on is loaded and set up correctly.

**RELATED LINKS**

- P. 49 "Attach the object to be printed on."

# The Object to be Printed on Becomes Soiled When Printed

## Are the print heads dirty?

The following may cause ink to drip on the object to be printed on during printing.

- Buildup of fibrous dust (lint) around the heads
- Ink transferred to the heads due to rubbing against the object to be printed on

If this happens, perform manual cleaning. We recommend carrying out periodic head cleaning.

**RELATED LINKS**

• P. 157 "Manual Cleaning"

## Is the humidity of the room too low?

Use the machine in an environment of 35 to 80% RH (no condensation).

# Colors are unstable or uneven

## Did you shake the ink cartridges before installing them?

Shake new ink cartridges 50 times (about 20 seconds) before you install them.

Every day before starting work, remove the white ink cartridge, shake it 50 times (about 20 seconds), and then reinsert it.

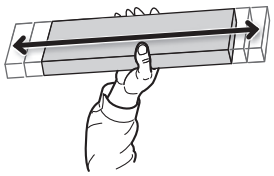

## Has the printer been used continuously for a long time?

If, during use, the white ink concentration becomes low, use the "CIRCULATE INK" function.

**RELATED LINKS**

- P. 168 "Circulating the Ink to Clear Precipitation"

## Was printing paused partway through?

When printing is paused, the coloring at the seam may be altered when printing resumes. Avoid pausing printing. By default, printing pauses when ink remaining inside the machine runs out. Printing may also pause when data is not sent from the computer quickly enough. We recommend not performing any other tasks with the computer while printing is in progress.

## Is the printer installed in a level and stable location?

Never install the machine in a location where it is tilted or where it may wobble or experience vibration. These factors may lead to dot-dropout or reduced printing quality.

## Is the printer set to pause during printing for cleaning?

If time is set in the "PERIODIC CL." menu setting, cleaning may start by pausing ongoing printing. When printing pauses, the printed colors may be uneven. Set the "PERIODIC CL." menu setting to "NONE" or "PAGE".

**RELATED LINKS**

- P. 82 "Preventing Soiling of the Object to Be Printed On and Dot Drop-out"

## Is the printer being used in a location subject to severe changes in the operating environment?

Large fluctuations in temperature or humidity while printing is in progress may cause the colors to change partway through the printing. When printing, use the machine in a location where the temperature and humidity are stable.

## Are the settings for the "PRESET" menu item appropriate?

If the settings selected with the "PRESET" menu item are not suitable for the type of object to be printed on, printing may be adversely affected. Select settings appropriate for the object to be printed on.

# Machine Problems


The Print Heads Do Not Move ..... 204
What to Do First ..... 204
If the Print Heads Still Do Not Move ..... 204
The printer unit does not run ..... 205
Is the power switched on? ..... 205
Is [SETUP] lit? ..... 205
Are any covers open? ..... 205
Is the top menu displayed? ..... 205
Is [PAUSE] lit? ..... 205
Has the ink run out? ..... 205
Is a message displayed on the screen? ..... 206
Are the cables connected? ..... 206
Is the status LED for the LAN cable connector lit in green? ..... 206
Are the LAN settings correct? ..... 206
Did the software RIP end abnormally? ..... 206
Is the temperature of the room too low? ..... 207
The flat table does not move ..... 208
Is something stuck in one of the movable components inside of the machine? ..... 208
Are any covers open? ..... 208
The Head Gap Sensor Does Not Detect the Object to Be Printed on ..... 209
Is something covering the head gap sensor or has it attracted dust? ..... 209
It Is Not Possible to Check the Amount of Discharged Fluid in the Drain Bottle ..... 210
Is ink splattered around the inside of the drain bottle? ..... 210

# The Print Heads Do Not Move

If the print-head carriage stops over the flat table, take action immediately to prevent the heads from drying out.

## What to Do First

Switch the sub power off and then back on again. If the print heads move to the home position (inside the panel cover), it means the operation has ended successfully.

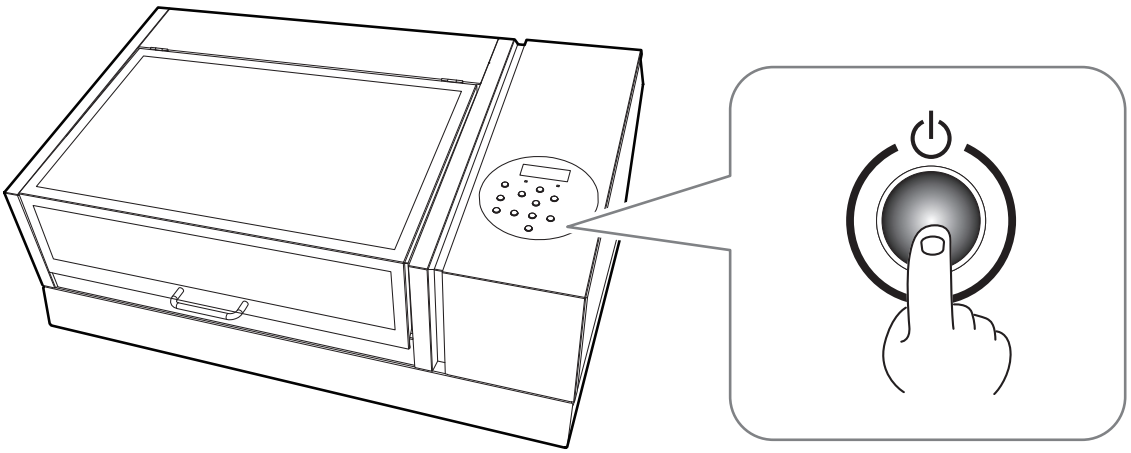

**If the Print Heads Still Do Not Move**

Try switching off the main power, then switching on the main power again, followed by the sub power.

## If the Print Heads Still Do Not Move

If the heads still do not move, carry out the following emergency response measure, and then contact your authorized Roland DG Corporation dealer.

**Procedure**

1. **Switch off the main power, and then open the front cover.**
2. **Gently move the print-head carriage to the home position by hand.**

   Stopping at the place where the audible click is heard locks the print-head carriage in place.

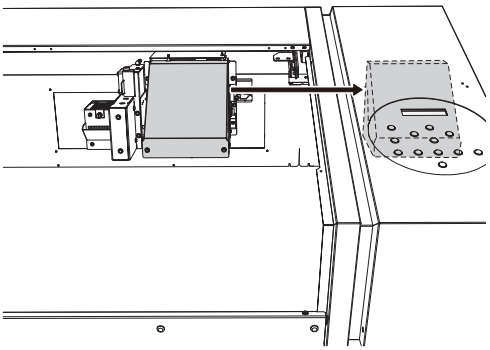

3. **Close the front cover.**

# The printer unit does not run

## Is the power switched on?

Switch on the printer's main power, and then press the sub power switch and make sure the sub power switch lights.

**RELATED LINKS**

- P. 23 "Turning the Power On"

## Is [SETUP] lit?

Printing is only performed when [SETUP] is lit. Complete up to setting the printer area, close the front cover, and press [ENTER].

**RELATED LINKS**

- P. 49 "Printing"

## Are any covers open?

Close the front cover and the panel cover.

## Is the top menu displayed?

If the top menu is not displayed, output will not start even when data is sent from the computer. To go to the top menu (shown below), press [MENU] and then press [◀].

If a message is displayed, perform the operation prompted by the displayed message.

**RELATED LINKS**

- P. 212 "Messages"
- P. 215 "Error Messages"

## Is [PAUSE] lit?

When [PAUSE] is lit, operation is paused. To resume, press [PAUSE]. [PAUSE] turns off and printing resumes.

**RELATED LINKS**

- P. 62 "Pausing and Resuming Printing"

## Has the ink run out?

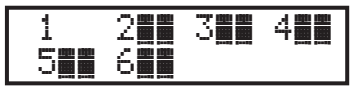


When data is sent while the screen shown in the figure is displayed, a message appears and a warning beep sounds. At the same time, operation pauses. The number of the cartridge that ran out of ink flashes. When the ink cartridge is replaced with a new one, output resumes.

**RELATED LINKS**

- P. 127 "How to Replace the Ink Cartridge"

## Is a message displayed on the screen?

**RELATED LINKS**

- P. 212 "Messages"
- P. 215 "Error Messages"

## Are the cables connected?

Connect the cables securely.

**RELATED LINKS**

- LEF2-200 Setup Guide (https://downloadcenter.rolanddg.com/LEF2-200)

## Is the status LED for the LAN cable connector lit in green?

If the status LED (①) for the LAN cable connector is not lit in green, the network connection has not been made correctly. Check whether or not the network routing is appropriate. Try connecting the computer and the machine to the same hub or connecting them directly using a crossover cable. If this makes it possible to perform output, it means the problem is in the network itself.

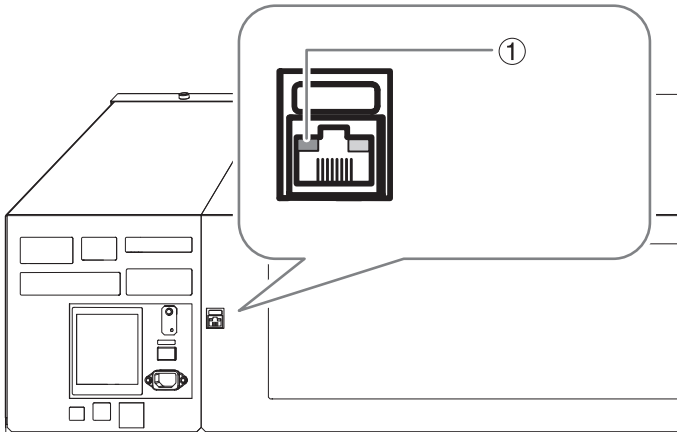


## Are the LAN settings correct?

If printing is not possible even though the link LED for the Ethernet connector is lit, make sure the IP address and other settings are appropriate. The settings on both the machine and the computer must be appropriate. Redo the settings, checking to ensure that the IP address does not conflict with the IP address for another device on the network, that the port setting for the software RIP specifies the IP address set on the machine, that the settings have no typing errors, and for other such problems.

**RELATED LINKS**

- LEF2-200 Setup Guide (https://downloadcenter.rolanddg.com/LEF2-200)

## Did the software RIP end abnormally?

Make sure the software RIP is running correctly, and then switch the sub power switch off and back on.

## Is the temperature of the room too low?

Use the machine in an environment with an ambient temperature of 20 to 32°C (68 to 90°F).

# The flat table does not move

## Is something stuck in one of the movable components inside of the machine?

Check whether or not something is catching or stuck and interfering with operation.

## Are any covers open?

Close the front cover and panel cover during startup and printing. If any cover is open while starting up or printing, the flat table cannot be moved for your safety.

# The Head Gap Sensor Does Not Detect the Object to Be Printed on

## Is something covering the head gap sensor or has it attracted dust?

Check whether something is interfering with the head gap sensor's detection.

# It Is Not Possible to Check the Amount of Discharged Fluid in the Drain Bottle

## Is ink splattered around the inside of the drain bottle?

If ink is splattered around the inside of the drain bottle, it may not be possible to check how much discharged fluid the bottle contains.

**RELATED LINKS**

- P. 134 "If the Contents of the Drain Bottle Are Not Visible"

# Messages on the Operation Panel


Messages ..... 212
"1 ■ 2 ■ 3 ■ 4 ■ 5■ 6 ■ 7 ■ 8 ■" ..... 212
"PRESS THE POWER KEY TO CLEAN" ..... 212
"CIRCULATING INK" ..... 212
"SHAKE WHITE INK CARTRIDGE" ..... 212
"FINISHED PRINT" ..... 212
"SET CARTRIDGE""REMOVE CARTRIDGE" ..... 212
"CLOSE XXX COVER""DRY UP MAY DAMAGE THE HEAD" ..... 212
"CLOSE XXX COVER" ..... 212
"SET CL-LIQUID""REMOVE CL-LIQUID" ..... 213
"READJUST TABLE HEIGHT" ..... 213
"DO HEAD REFRESH" ..... 213
"INSTALL DRAIN BOTTLE" ..... 213
"EMPTY DRAIN BOTTLE" ..... 213
"SETUP MEDIA" ..... 213
"TIME FOR FILTER REPLACE" ..... 213
"TIME FOR WIPER REPLACE" ..... 214
"TIME FOR MAINTENANCE" ..... 214
Error Messages ..... 215
"AREA TOO SMALL CONTINUE" ..... 215
"PRINT AREA TOO SMALL" ..... 215
"CANCELED FOR TABLE HEIGHT" ..... 215
"CHECK TABLE HEIGHT" ..... 215
"CHECK HEIGHT OF HEAD REFRESHER" ..... 215
"ADJUST FAILED" ..... 216
"TEMPERATURE IS TOO HIGH **°C" ..... 216
"TEMPERATURE IS TOO LOW **°C" ..... 216
"DATA ERROR CANCELING..." ..... 216
"INK SHELF LIFE EXPIRE 123456" ..... 216
"WRONG CARTRIDGE" ..... 217
"WRONG HEAD IS INSTALLED" ..... 217
"AVOIDING DRY UP TURN POWER OFF" ..... 217
"MOTOR ERROR TURN POWER OFF" ..... 217
"CANCELED FOR MOTOR PROTECTION" ..... 217
"SERVICE CALL ****" ..... 217
"CAN'T PRINT CROP CONTINUE?" ..... 218

# Messages

These are the main messages that appear on the machine's display to prompt correct operation. They do not indicate any error. Follow the prompts and take action accordingly.

## "1 ■ 2 ■ 3 ■ 4 ■ 5■ 6 ■ 7 ■ 8 ■"

**Only a small amount of ink remains.**

Replace the ink cartridge indicated by the flashing number with a new cartridge.

## "PRESS THE POWER KEY TO CLEAN"

**This message appears when the machine has not been used for approximately a month.**

Turn on the sub power once a month.

## "CIRCULATING INK"

**White ink is being circulated inside the machine. This action is automatically performed to clear the white ink precipitation.**

Wait until the displayed message changes.

## "SHAKE WHITE INK CARTRIDGE"

**This message appears when an action is selected under "ACTION" (including "CIRCULATE") in the start timer settings.**

Remove the white ink cartridge, shake it 50 times (about 20 seconds) with a stroke length of around 5 cm (2 in.) from each end, and then reinsert it. Afterwards, press [ENTER] to switch off the sub power.

**RELATED LINKS**

- P. 135 "Maintenance of Ink Cartridges"
- P. 101 "Setting the Start Timer"

## "FINISHED PRINT"

**Printing is finished.**

Press [ENTER].

## "SET CARTRIDGE""REMOVE CARTRIDGE"

**This message appears at times such as during ink cartridge replacement.**

Insert or remove the ink cartridge indicated by the flashing number.

## "CLOSE XXX COVER""DRY UP MAY DAMAGE THE HEAD"

**The front cover or panel cover is open.**

Close the front cover or panel cover or both. If the message is left displayed, the print heads may get dry, resulting in malfunction.

## "CLOSE XXX COVER"

**The front cover or panel cover is open when setting the start timer.**

Close the front cover or panel cover or both. If the message is left displayed, setting the timer will not be completed.

RELATED LINKS

- P. 101 "Setting the Start Timer"

## "SET CL-LIQUID""REMOVE CL-LIQUID"

**This message appears at times such as during head cleaning.**

Insert or remove the SOL INK cleaning cartridge into the slot(s) indicated by the flashing number.

## "READJUST TABLE HEIGHT"

**During printing, the object to be printed on came into contact with the head gap sensor, but "CLEARANCE MODE" is set to "RE-ADJ", so the height of the object to be printed on was reset automatically and printing was performed to completion.**

This message appears when "CLEARANCE MODE MSG. SETTING" is set to "ENABLE".

After verifying the message, press [ENTER].

RELATED LINKS

- P. 69 "Determining the Maximum Value (Threshold) for Automatic Height Adjustment"

## "DO HEAD REFRESH"

**The recommend interval for head refreshing has elapsed.**

The specified time has elapsed since the last head refreshing. Press [ENTER] to bring up the screen that allows you to select whether to perform head refreshing. If you select "YES" and press [ENTER], the head refreshing menu appears. Perform head refreshing.

RELATED LINKS

- P. 146 "Head Refreshing Method"

## "INSTALL DRAIN BOTTLE"

**Check whether the drain bottle is installed.**

Install the drain bottle, and then press [ENTER].

## "EMPTY DRAIN BOTTLE"

**This message appears when a certain amount of discharged fluid collects in the drain bottle.**

When this message is displayed, discard the discharged fluid.

## "SETUP MEDIA"

**This message appears when an attempt to perform a printing test was made while no object to be printed on was loaded.**

Reload the object to be printed on and press [SETUP].

## "TIME FOR FILTER REPLACE"

**It is now time to replace the filter used for the mist fan that adjusts the scattering of ink mist.**

After verifying the message, press [ENTER]. Then immediately replace the filter.

RELATED LINKS

- P. 193 "Replacing the Filter"

## "TIME FOR WIPER REPLACE"

**It is time to replace the wipers.**

After verifying the message, press [ENTER]. Then immediately replace the wipers.

**RELATED LINKS**

- P. 188 "Replacing the Wipers and Wiper Cleaner"

## "TIME FOR MAINTENANCE"

**It is time to perform manual cleaning.**

After verifying the message, press [ENTER], and then perform manual cleaning.

**RELATED LINKS**

- P. 157 "Manual Cleaning"

# Error Messages

This section describes the error messages that may appear on the machine's display, and how to take action to remedy the problem. If the action described here does not correct the problem or if an error message not described here appears, contact your authorized Roland DG Corporation dealer.

## "AREA TOO SMALL CONTINUE"

**The size of the data is larger than the print area of the loaded object to be printed on.**

To continue printing without correcting this, press [ENTER]. The portion extending beyond the print area will not be printed. To stop printing, stop sending data from the computer and hold down [SETUP] for one second or longer. Make the print area wider by replacing the object to be printed on with a larger object or by changing the position of the object, then send the data again.

## "PRINT AREA TOO SMALL"

**The size of the test print is larger than the print area of the loaded object to be printed on.**

Press any key on the operation panel to go back to the main menu. Make the print area wider by replacing the object to be printed on with a larger object or by changing the position of the object, then redo the test printing.

## "CANCELED FOR TABLE HEIGHT"

**The object to be printed on was detected in a position (at a height) at which it hits the print heads.**

Press any key (except the sub power switch) on the operation panel, and the message disappears. If the setup of the object to be printed on is completed, the setup is canceled. Redo the setup.

**RELATED LINKS**


- P. 49 "Printing"
- P. 65 "Adjusting the Height"


## "CHECK TABLE HEIGHT"

**The object to be printed on was detected in a position (at a height) at which it hits the print heads.**

Remove the object to be printed on (remove the cause of the failure) or change its position. After verifying the message, press [ENTER].

**RELATED LINKS**


- P. 49 "Printing"
- P. 65 "Adjusting the Height"


## "CHECK HEIGHT OF HEAD REFRESHER"

**The possibility of the print heads colliding into the head refresher (or other obstacles) when they move for head refreshing was detected.**

Press [ENTER] to clear the message.

The jig may be in the way or it may not have been attached correctly. Correctly reattach the head refresher by removing the jig or reviewing how the jig is attached. Then, perform head refreshing again.

RELATED LINKS

- P. 146 "Head Refreshing Method"

## "ADJUST FAILED"

**When detecting the installation height of the head refresher, the head gap sensor could not detect the head refresher position.**

Press [ENTER] to clear the message.

The jig and head refresher may not have been attached correctly. Correctly reattach the jig and head refresher by removing them or reviewing how they are attached. Also check that the change in the installation height of the head refresher is 55 mm (2.2 in.) or less. Then, set the installation height of the head refresher again.

RELATED LINKS

- P. 96 "Setting the Installation Height of the Head Refresher"

## "TEMPERATURE IS TOO HIGH **°C"

**The temperature of the location where the machine is installed has risen above the ambient temperature at which the machine can operate.**

Operation cannot be continued. Turn off the sub power. The displayed temperature is the current ambient temperature of the installation location. Bring the installed location to a temperature at which operation is possible (20 to 32°C or 68 to 90°F) and allow the machine to come to room temperature, and then turn on the power.

## "TEMPERATURE IS TOO LOW **°C"

**The temperature of the location where the machine is installed has fallen below the ambient temperature at which the machine can operate.**

Operation cannot be continued. Turn off the sub power. The displayed temperature is the current ambient temperature of the installation location. Bring the installed location to a temperature at which operation is possible (20 to 32°C or 68 to 90°F) and allow the machine to come to room temperature, and then turn on the power.

## "DATA ERROR CANCELING..."

**Output was stopped because a problem was found in the data received.**

Operation cannot be continued. Check whether or not there is an error in the data. Check for a problem with the connector cable or the computer, and redo the operation from setting up the object to be printed on.

## "INK SHELF LIFE EXPIRE 123456"

**One of the ink cartridges has expired.**

The numbers of the cartridges whose ink has exceeded its shelf life flash. After pressing [ENTER], replace the cartridge indicated by the flashing number.

This message is displayed when the sub power is turned on for the first time after the ink has expired. A buzzer sounds at the same time the message is displayed.

You can still continue to use the printer without replacing the ink cartridge. However, continuing to use an ink cartridge that has exceeded its shelf life may lead to the following problems and malfunction.

- Ink leaks from the ink cartridge.

- The ink viscosity increases, leading to ink discharge issues (which may result in decreased output quality).
- The ink hardens, leading to printer malfunctions.

We recommend that you replace any expired ink cartridges. For information about purchasing ink cartridges, contact your authorized Roland DG Corporation dealer or visit our website (http://www.rolanddg.com/).

## "WRONG CARTRIDGE"

**An ink cartridge that cannot be used was installed.**

Remove the ink cartridge to clear the error. Use an ink cartridge of the specified type.

## "WRONG HEAD IS INSTALLED"

**An unusable print head has been installed.**

Turn off the sub power. After turning the power off, contact your authorized Roland DG Corporation dealer.

## "AVOIDING DRY UP TURN POWER OFF"

**The print heads were forced to the home position to prevent them from drying out.**

Operation cannot be continued. Switch the sub power off, and then back on. Opening the front cover while printing is in progress causes an emergency stop. Never allow the print heads to remain in this state.

## "MOTOR ERROR TURN POWER OFF"

**A motor error occurred.**

Operation cannot be continued. Turn off the sub power. Next, eliminate the cause of the error, then immediately switch on the sub power. If the machine is allowed to stand with the error uncorrected, the print heads may dry out and become damaged. This error may be caused by the object to be printed on being set incorrectly.

## "CANCELED FOR MOTOR PROTECTION"

**An attempt was made to perform one of the following operations (menu items) immediately after performing another one.**

- "PUMP UP"
- "HEAD WASH"
- "INK RENEWAL"
- "POWERFUL CL."
- Filling with ink

Press any key other than the sub power switch to cancel the error message.

When performing these menu items sequentially, this error message may appear in order to prevent malfunctions due to the overheating of the pump motor. In this case, leave the machine alone for approximately 10 minutes before resuming operation.

## "SERVICE CALL ****"

**An unrecoverable error occurred or part replacement that must be performed by a service technician is required.**

Note the number displayed on the display screen, and then switch off the sub power. After you switch off the power, inform your authorized Roland DG Corporation dealer of the number that appeared on the display.

## "CAN'T PRINT CROP CONTINUE?"

**The size of the data including the crop marks is larger than the printing area of the loaded media.**

To continue performing output without correcting this, press [ENTER]. At this time, the crop marks and the portion extending beyond the printing area are not output. To stop output, stop sending data from the computer and cancel the setup. Make the printing area wider by replacing the object to be printed on with a larger object, and then send the data again.

**The size of the data being output is too small.**

Make the horizontal-direction (scan-direction) size of the data at least 65 mm (2.6 in.). To continue performing output without correcting this, press [ENTER]. At this time, the data is output without printing the crop marks. To stop output, stop sending data from the computer and cancel the setup. Increase the size of the data, redo the setup, and then send the data again.

# Appendix

# Operations When Moving the Unit

Moving the Unit ..... 221
Step 1: Cleaning All Print Heads ..... 221
Step 2: Securing the Print Heads and the Flat Table Using Retainers ..... 224
Step 3: Reinstalling the Machine ..... 226

# Moving the Unit

Before moving the machine, dispose of the discharged fluid and secure the print heads in place. Attempting to move the machine without first performing these preparations may result in damage to internal components due to leaking ink or damage to the print heads.

**IMPORTANT**

- Once the preparations for moving the machine are complete, move the machine promptly and turn on the machine as soon as possible after the machine is relocated. If you leave the machine alone without turning it on, the precipitated ink will coagulate and result in problems such as the clogging of the print heads.
- When moving the machine, keep it at a temperature from 5 to 40°C (41 to 104°F) and at a humidity from 20 to 80% (with no condensation). Failure to do so may result in a breakdown.
- Handle the machine with care when moving it, keeping it level (not tilted at an angle) and preventing it from striking other objects.

**MEMO**

**Items Required for This Work**

- New SOL INK cleaning cartridges: 6 (4 for cleaning and 2 for ink filling)

## Step 1: Cleaning All Print Heads

**Procedure**

1. **Press [MENU].**
2. **Press [▼] to display the screen shown below.**

3. **Press [▶] once, and then press [▼] several times to display the screen shown below.**

4. **Press [▶] once, and then press [▼] several times to display the screen shown below.**

5. **Press [ENTER].**

6. **Make sure the cleaning liquid is ready.**
7. **Press [ENTER].**

8. **Open the panel cover.**

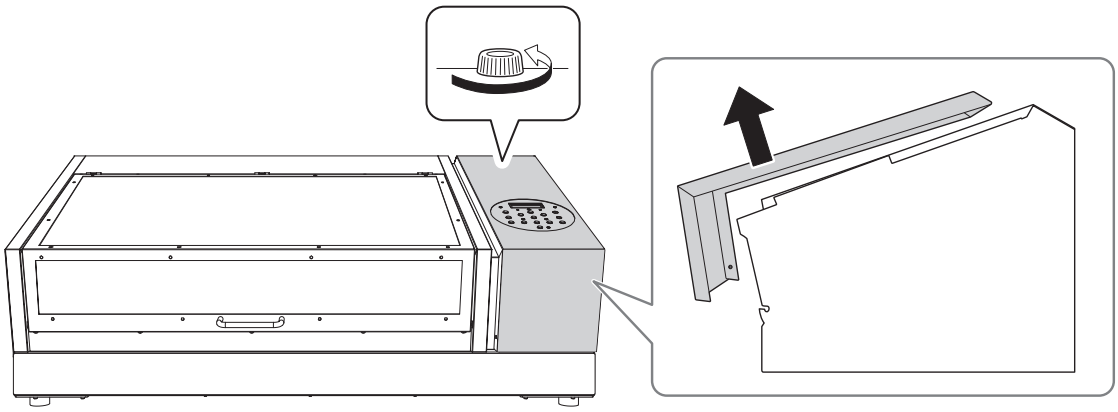

**9.** **Remove the drain bottle and discard the discharged fluid.**

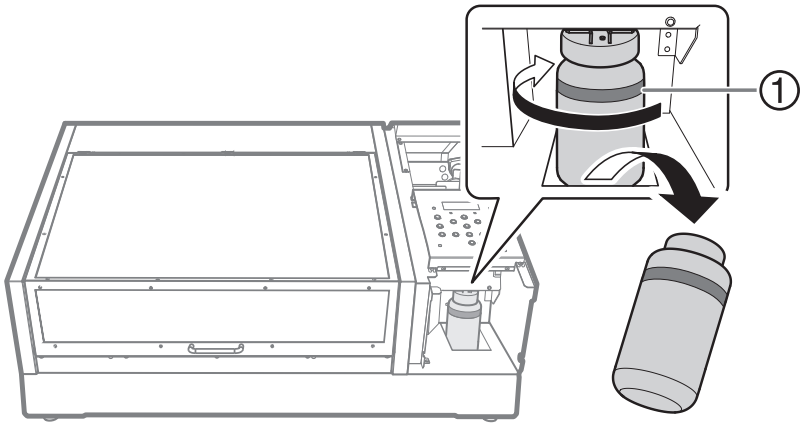


①: Upper limit. Discard the discharged fluid before this line is passed.

**IMPORTANT**

When you remove the drain bottle, a few drops of discharged fluid may come out of the machine. Exercise caution to prevent this fluid from soiling your hands.

**10.** **Quickly attach the emptied drain bottle to the machine once more.**

**11.** **Close the panel cover.**

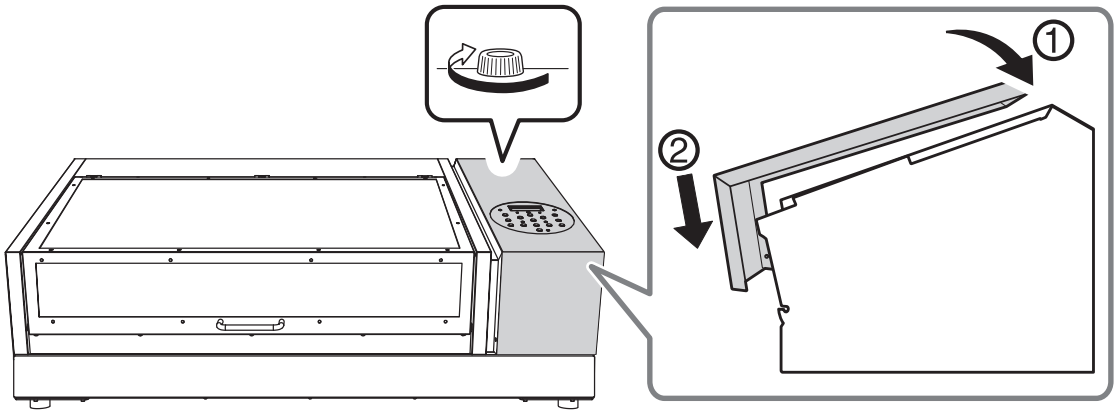


**IMPORTANT**

The following operations will discharge large amounts of fluid. If you do not empty the drain bottle, the discharged fluid may overflow.

**12.** **Press [ENTER].**

The screen shown below appears.

**13.** **Thereafter, follow the on-screen instructions to carry out the operations.**

After cleaning has finished, the sub power is automatically switched off.

## Step 2: Securing the Print Heads and the Flat Table Using Retainers

Use the retainer that was attached to the inside of the machine during its installation.

**Procedure**

**1. Remove the stored retainers A (①) and B (②).**

Make sure to remove all five retaining screws (③).

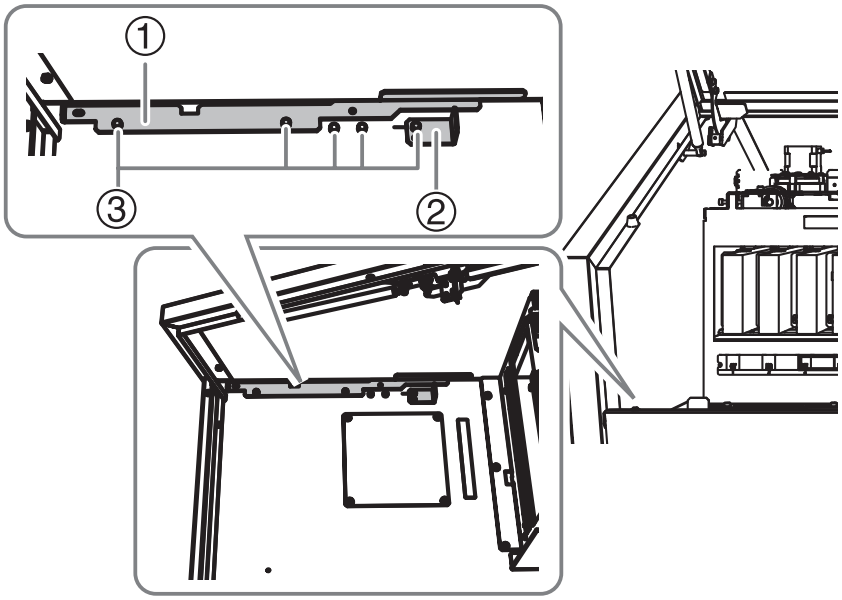


**2. Using the five retaining screws (③), secure the print heads with retainer A (①) and the flat table with retainer B (②).**

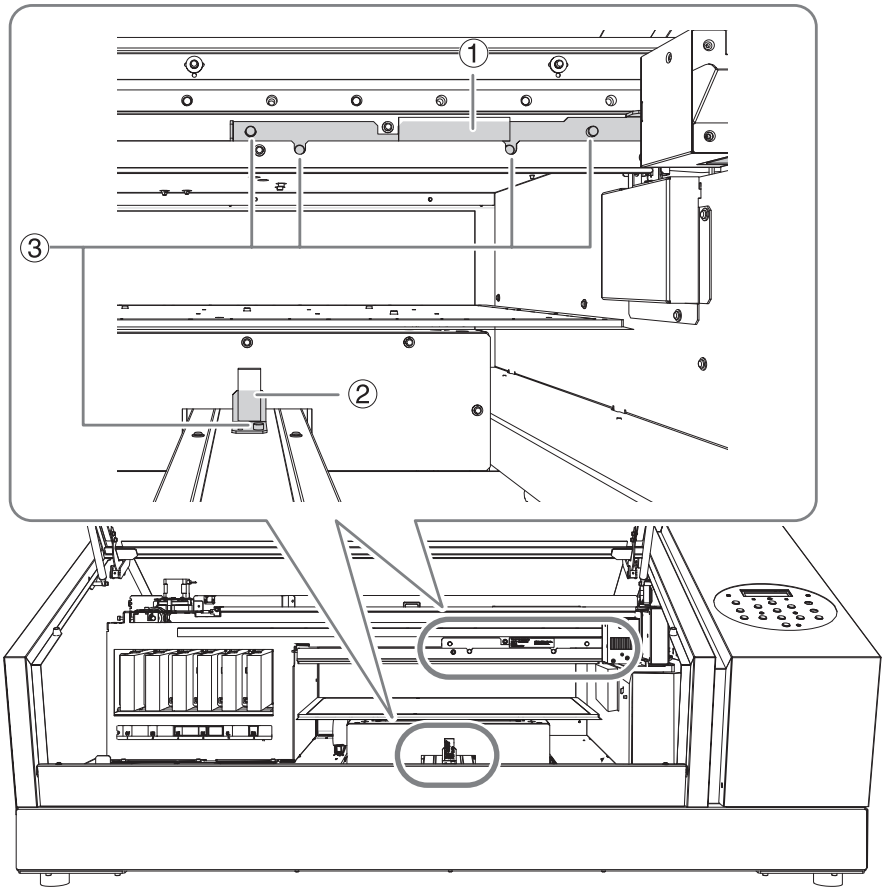

The machine is now ready to be moved.

## Step 3: Reinstalling the Machine

**Procedure**

1. **Once the preparations are complete, move the machine with as little delay as possible.**
2. **Reinstall the printer immediately, and then remove the retainer securing the print heads and flat table in place.**

   For storage, attach retainer A (①) and retainer B (②) using the retaining screws (③).

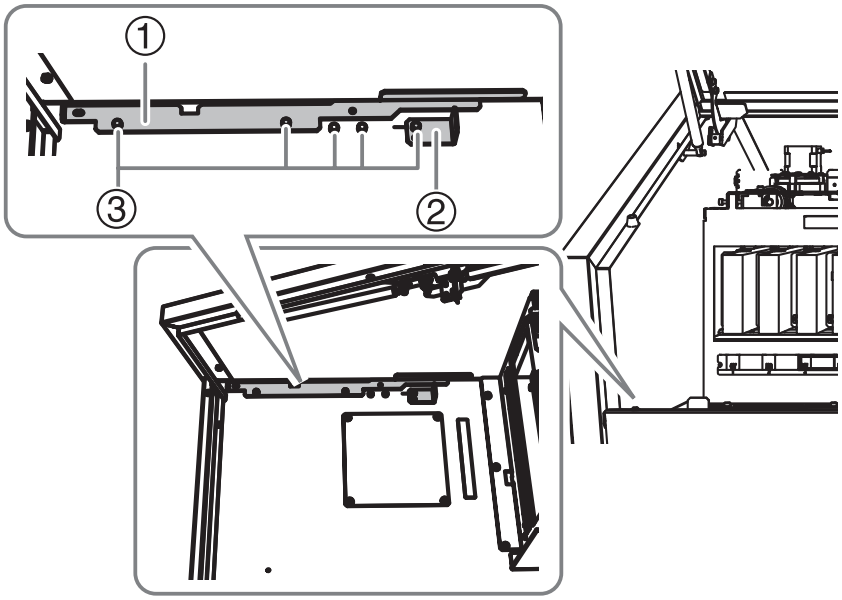


3. **Turn on the main power switch.**

   **IMPORTANT**

   To prevent the print heads from being damaged, move the machine with as little delay as possible and switch on the main power as soon as possible after moving the machine. To install the machine again, follow the procedure in the Setup Guide.

4. **Press the sub power button.**

# Main Specifications

Dimensional Drawings..... 228
When using a jig: Hole positions for the head refresher..... 229

# Dimensional Drawings

**Outer dimensions**

Unit: mm

Φ (Diameter)

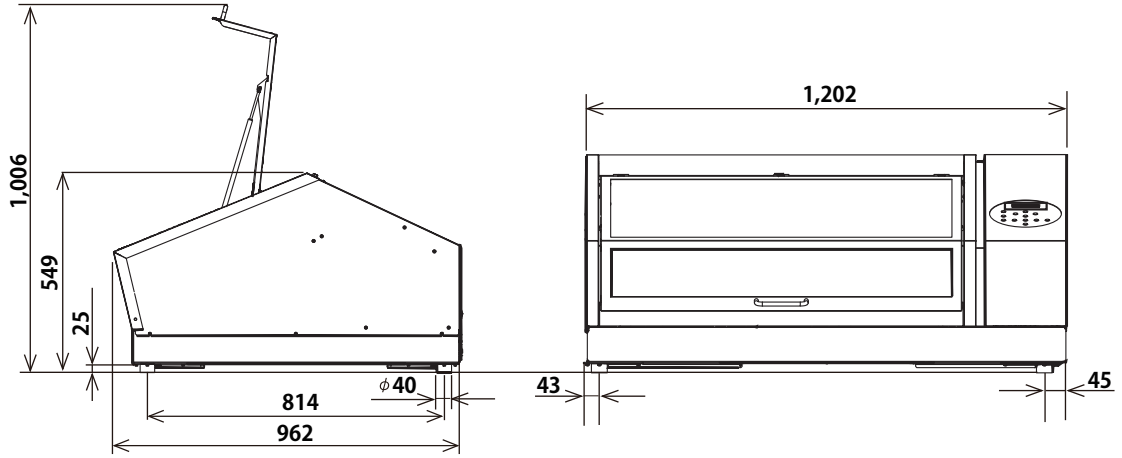


**Flat table dimensions**

Unit: mm

Φ (Diameter)

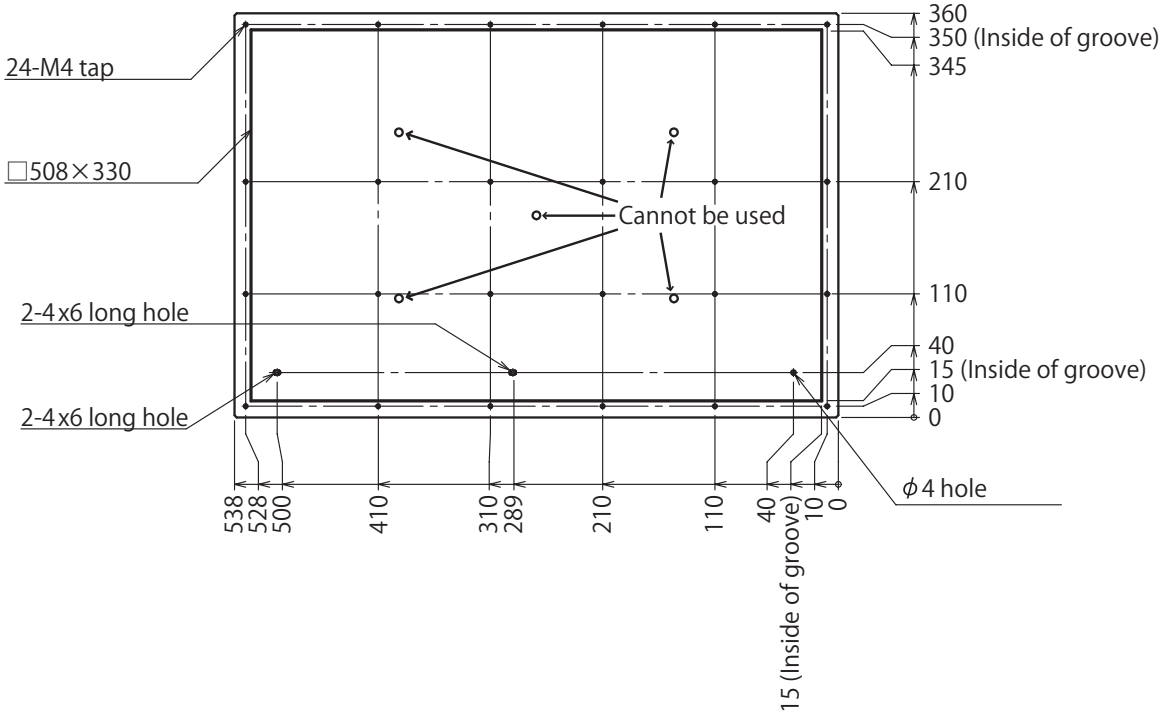

## When using a jig: Hole positions for the head refresher

Unit: mm

Φ (Diameter)

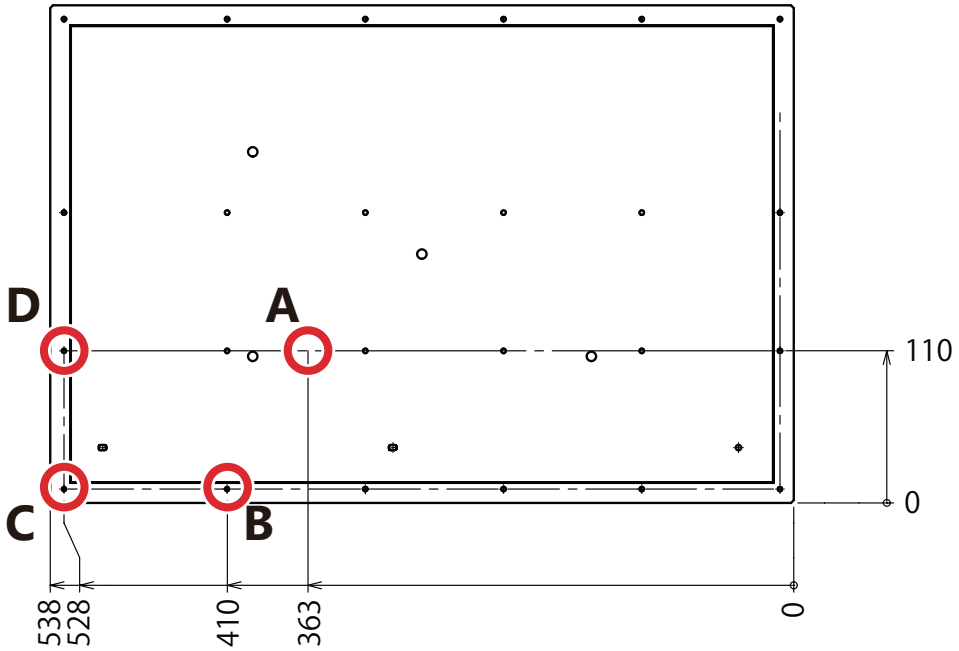


- **A, B, C, D: Head refresher leg positions**

  When using the printing jig, open a hole with a diameter of 8 mm in each of the above positions to enable the installation of the head refresher.

  You can select position A from the four locations shown below.

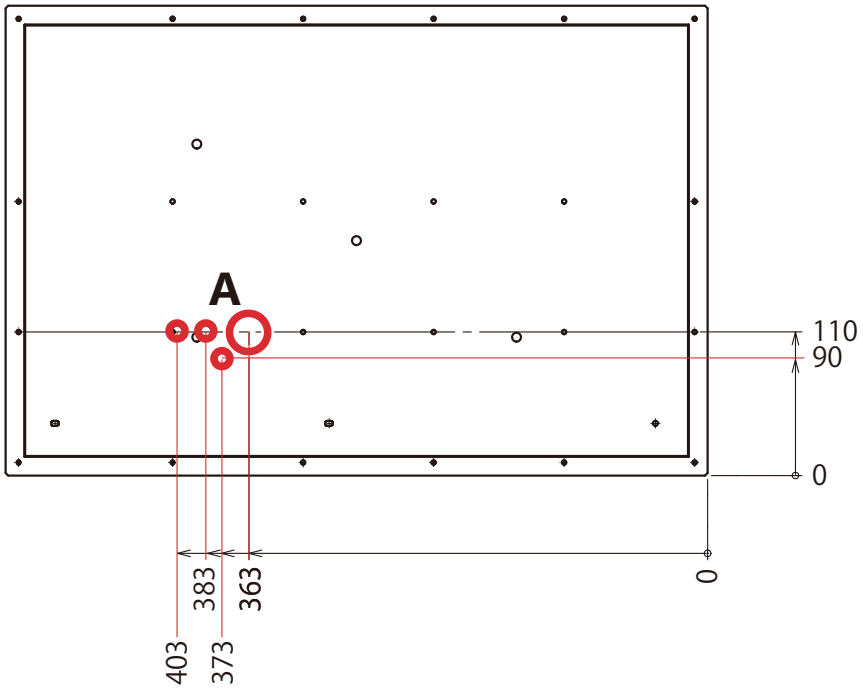

# MEMO

This product is using GNU General Public License (GPL) / GNU Lesser General Public License (LGPL) software. You can obtain the GPL/LGPL source code used in this product by downloading it from the Roland DG Corporation website. See the following URL for details on the basic method for acquiring the source code.

URL: https://www2.rolanddg.com/gpl/

---

Company names and product names are trademarks or registered trademarks of their respective holders.