Roland

CAMM-1 PRO

Sign Maker by Roland DG Corporation

# CX-500
# CX-400
# CX-300

# USER'S MANUAL

Thank you very much for purchasing the CX-500/400/300.

- To ensure correct and safe usage with a full understanding of this product's performance, please be sure to read through this manual completely and store it in a safe location.
- Unauthorized copying or transferral, in whole or in part, of this manual is prohibited.
- The contents of this operation manual and the specifications of this product are subject to change without notice.
- The operation manual and the product have been prepared and tested as much as possible. If you find any misprint or error, please inform us.
- Roland DG Corp. assumes no responsibility for any direct or indirect loss or damage which may occur through use of this product, regardless of any failure to perform on the part of this product.
- Roland DG Corp. assumes no responsibility for any direct or indirect loss or damage which may occur with respect to any article made using this product.

Roland DG Corporation

# Table of Contents


**1 Checking Supplied Items** ..... 3
**2 Part Names and Functions** ..... 3
2-1 Front View ..... **3**
2-2 Rear View ..... 4
2-3 Operation Panel ..... 4
**3 Setup** ..... 5
3-1 Setting Up ..... 5
3-2 Connection ..... 6
3-3 Turning on the Power ..... 7
3-4 Installing and Setting Up the Driver ..... 7
**4 Basic Operation** ..... 8
4-1 Loading the Material (Roll Material) ..... 8
4-2 Installing a Blade ..... 14
4-3 Adjusting the Blade Force and Cutting Speed ..... 15
4-4 Setting the Origin Point ..... 17
4-5 Starting Cutting ..... 18
4-6 When Cutting is Completed ..... 20
**5 Advanced Operation** ..... 22
5-1 Detailed Cutting-condition Settings ..... 22
5-2 Details of the Origin-point Location and Cutting Area ..... 25
5-3 To Perform Lengthy Cutting ..... 28
5-4 Loading Flat Material (Standard-size Material, Cut Material, Etc.) ..... 30
5-5 Repeating the Same Cutting ..... 31
5-6 Front Loading ..... 32
5-7 The Overcut Feature ..... 35
5-8 The Preset Feature ..... 36
5-9 The Crop Mark Feature ..... 38
**6 About the Blades and Materials** ..... 40
6-1 Blade and Material Combinations ..... 40
6-2 About Special Materials ..... 41
**7 Descriptions of Features** ..... 42
7-1 Key Operations ..... 42
7-2 Display Menus Flowchart ..... 43
7-3 List of Functions ..... 46
**8 Maintenance** ..... 50
8-1 Cleaning ..... 50
8-2 Consumable Items ..... 51
8-3 How to Replace the Separating Knife ..... 52
**9 If There Is a Problem** ..... 53
9-1 Self-test Operation Check ..... 53
9-2 What to do if... ..... 54
9-3 Error Messages ..... 58
**10 Specifications** ..... 59
10-1 Specifications ..... 59
10-2 Interface Specifications ..... 61
10-3 Instruction Support Chart ..... 62



CutChoice™ is trademark of Roland DG Corporation.

Copyright © 2001 Roland DG Corporation


**http://www.rolanddg.com/**

# 1 Checking Supplied Items

Check the following to make sure that you received all the items that were shipped along with the unit.

| | | | |
|---|---|---|---|
|  Power Cord | Blade Holder (XD-CH3) 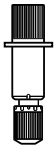 Pin |  Blade | Alignment tool  |
|  Replacement blade for separating knife | 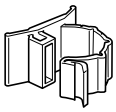 Cable Clamp | 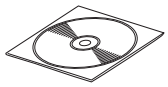 CD-ROM (Roland Software Package) | 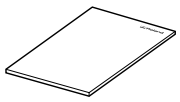 To Ensure Safe Use |
| 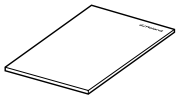 Startup Manual | | | |

# 2 Part Names and Functions

## 2-1 Front View

* The figure shows the CX-500 installed with the PNS-502 special stand.

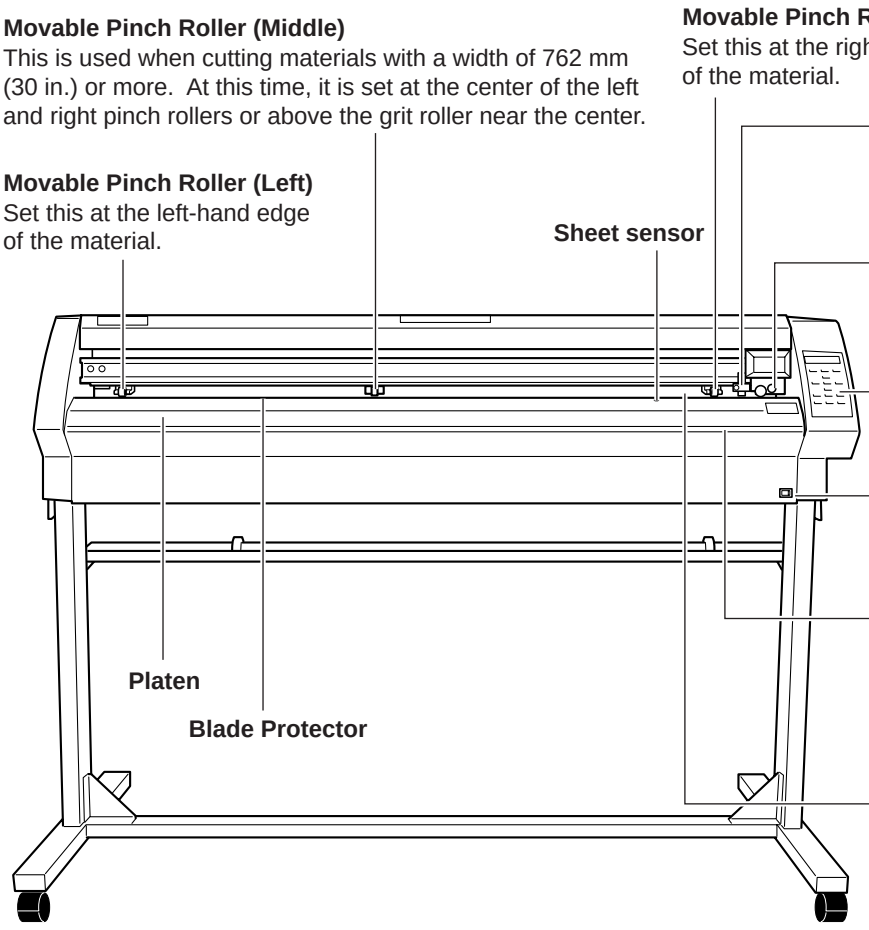

# 2-2 Rear View

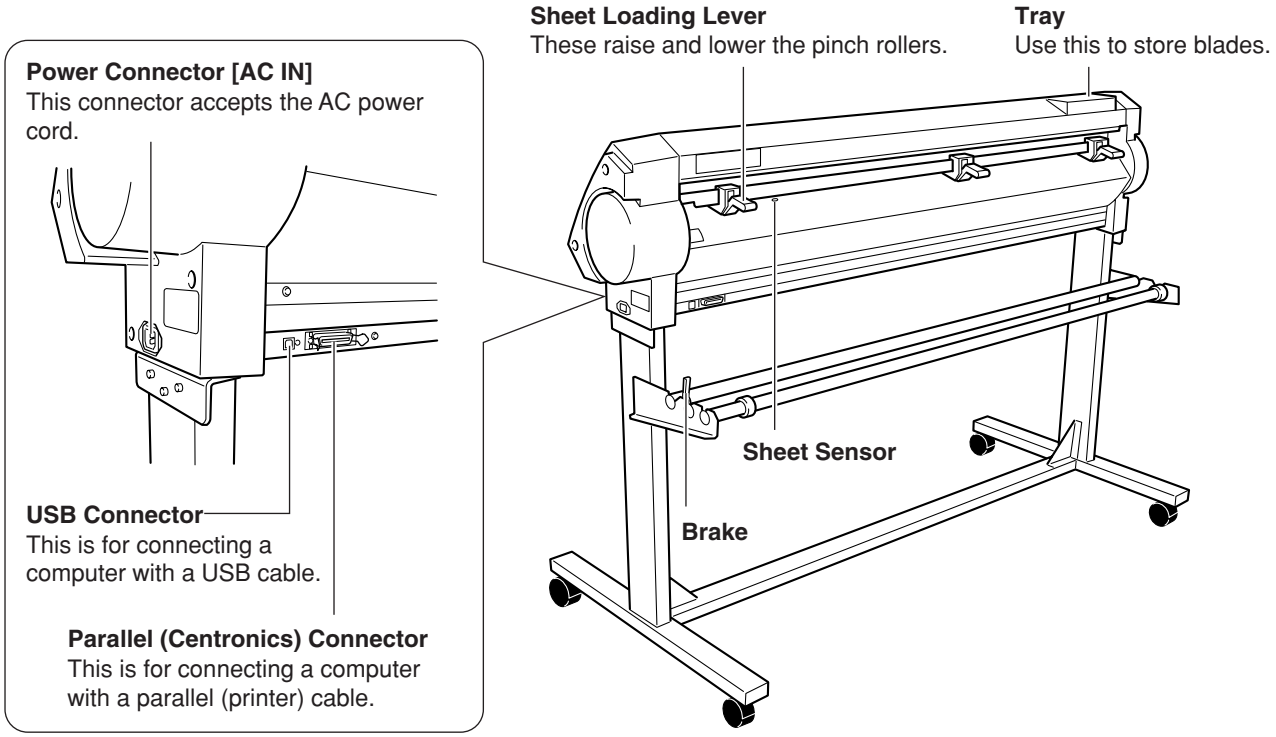


# 2-3 Operation Panel

For more information about the keys, see the respective reference sections and "7-3 List of Functions."

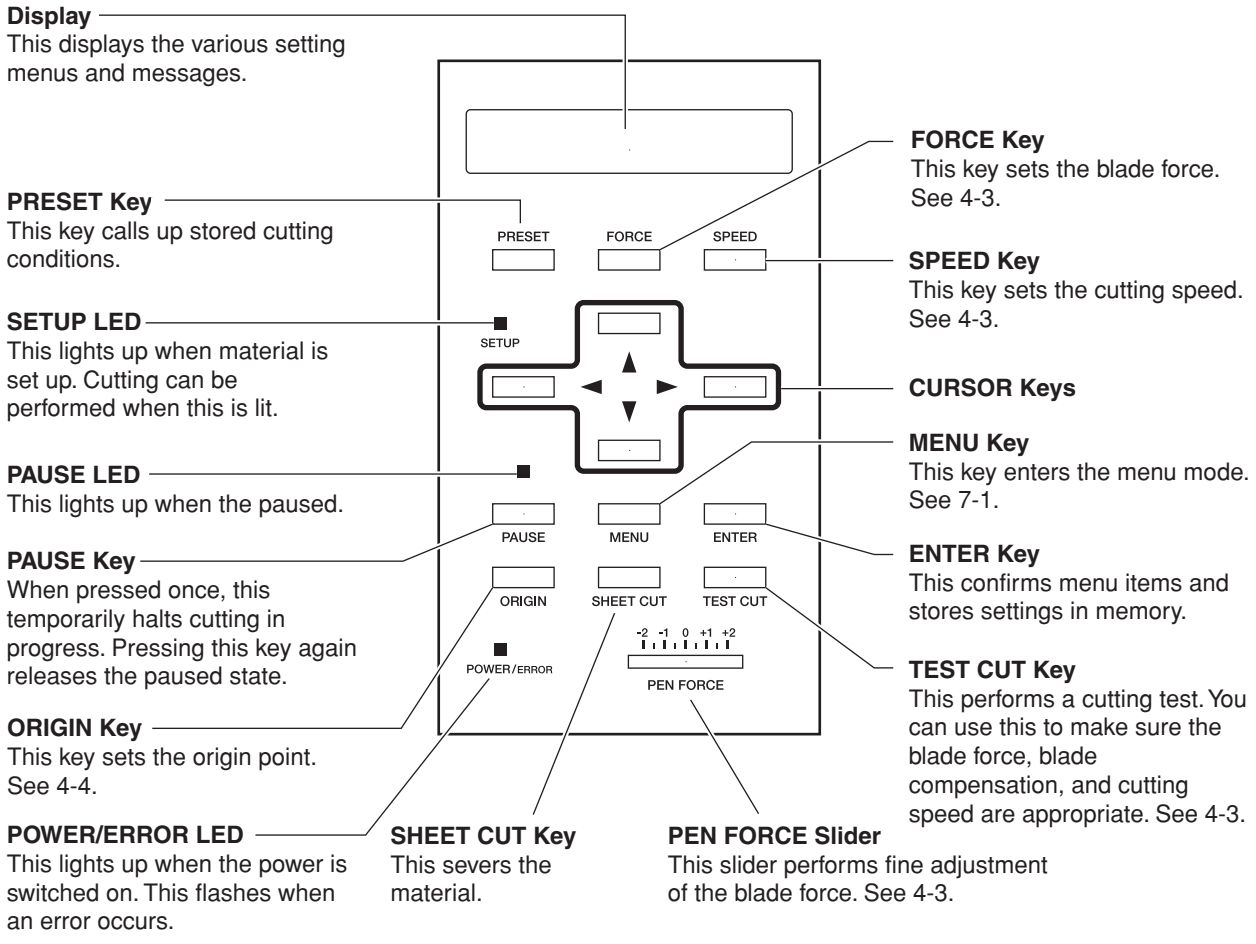

# 3 Setup

## 3-1 Setting Up

### ⚠CAUTION

**Unpacking, installing, or relocating the unit are operations which must be carried out by two or more persons holding the unit at its bottom surface on the left and right sides.**
Failure to do so may result in dropping the unit, leading to injury.

**Use care to avoid pinching the fingers when placing the unit on the stand.**
Doing so may result in injury.

**Release the caster locks for the stand before attempting to move.**
Otherwise the unit may tip over and cause injury.

**Use the joining screws to secure the unit to the stand.**
Failure to do so may result in falling of the unit, leading to injury.

**Install in a level and stable location.**
Otherwise the unit may tip over and cause injury.

**NOTICE** Never install this unit in any of the following situations, as it could result in damage:
Places where the installation surface is unstable or not level.
Places with excessive electrical noise.
Places with excessive humidity or dust.
Places with poor ventilation, because the CX-500/400/300 generates considerable heat during operation.
Places with excessive vibration.

For an explanation of how to assemble the unit and the stand (PNS-502/402/302), refer to the "ASSEMBLY INSTRUCTIONS" included with the stand.

When using the unit while mounted on a stand, be sure to ensure a sufficient amount of installation space for the unit. The required installation spaces for each model are listed below.

CX-500 : 1200 mm (47-1/4 in.) high, 1700 mm (66-15/16 in.) wide, and 900 mm (35-7/16 in.) depth
CX-400 : 1200 mm (47-1/4 in.) high, 1500 mm (59-1/16 in.) wide, and 900 mm (35-7/16 in.) depth
CX-300 : 1200 mm (47-1/4 in.) high, 1250 mm (49-1/4 in.) wide, and 900 mm (35-7/16 in.) depth

The material moves while cutting is in progress. Objects which may obstruct material movement must not be placed within 60 cm (23-5/8 in.) to the front or rear of the unit.

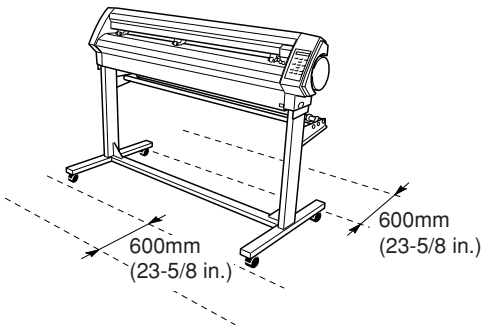

# 3-2 Connection

## ⚠WARNING

**Ground the unit with the ground wire.**
Failure to do so may result in risk of electrical shock in the even of a mechanical problem

**Use only with the power cord included with this product.**
Use with other than the included power cord may lead to fire or electrocution.

**Do not use with any electrical power supply that does not meet the ratings displayed on the unit.**
Use with any other power supply may lead to fire or electrocution.

**NOTICE** Be sure to use a shielded USB cable. Do not interpose a hub in the USB cable.

It is possible to use the CX-500/400/300 with it connected by both cables at the same time. Data is received with the port to which data is sent first taking priority. When cutting using the data received first is completed, data from the other port is received.

Securely connect the power cord, computer I/O cable and so on so that they will not be unplugged and cause failure during operation. Doing so may lead to faulty operation or breakdown.

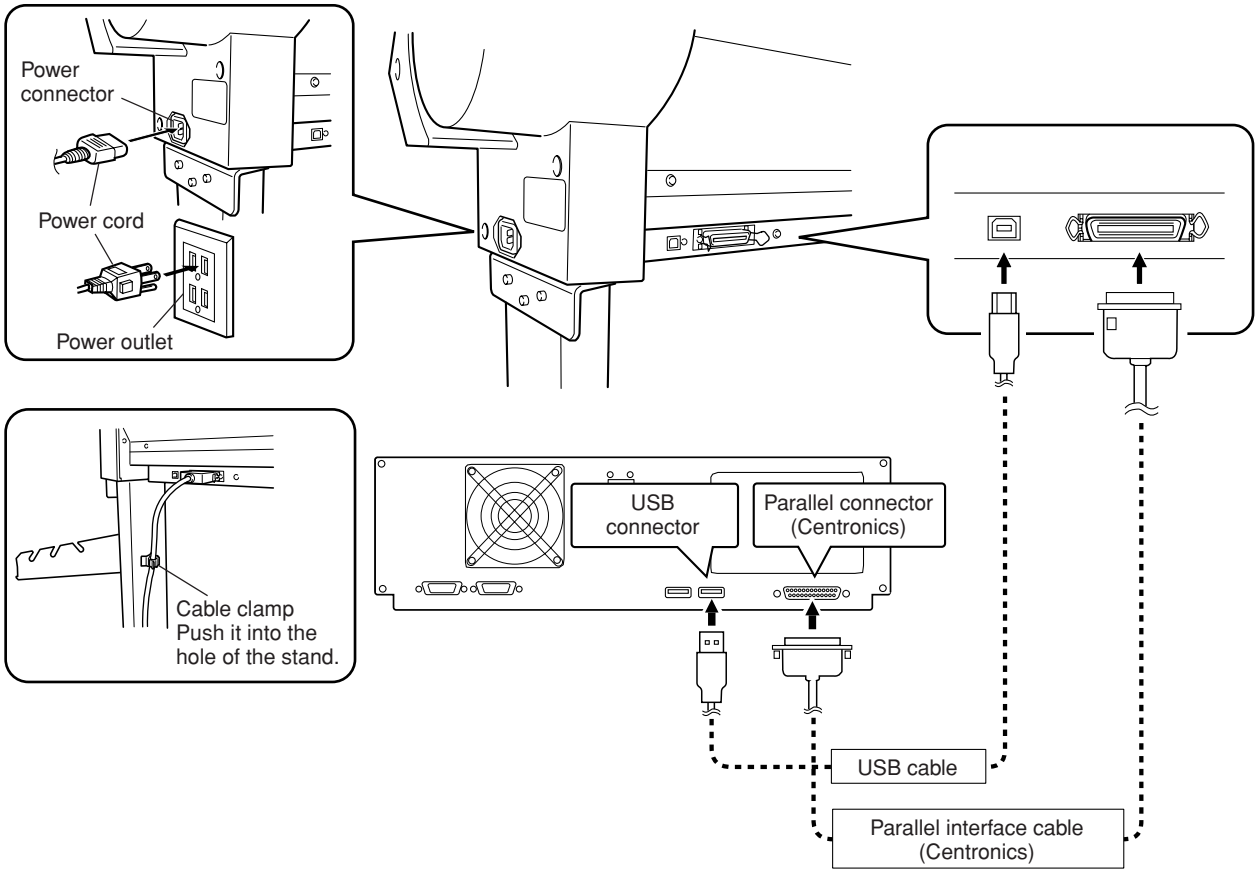

## 3-3 Turning on the Power

Use the switch at the front-right surface of the unit to turn on the power.

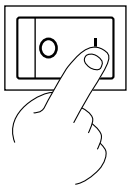

## 3-4 Installing and Setting Up the Driver

The included Roland Software Package CD-ROM contains softwares such as a driver. Refer to the included Startup Manual and install it on your computer.

# 4 Basic Operation

## 4-1 Loading the Material (Roll Material)

### ⚠CAUTION

**Roll material must be placed at a predetermined shaft position.**
Failure to do so may result in falling of the roll, leading to injury.

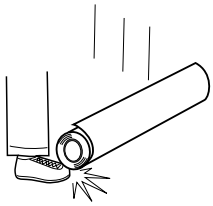

**Acceptable Material Width and Maximum Cutting Width**

| | Acceptable material widths | | Maximum cutting area |
|---|---|---|---|
| CX-500 | Min.90 mm (3-1/2 in.) | Max.1372 mm (54 in.) | 1195 mm (47 in.) |
| CX-400 | Min.90 mm (3-1/2 in.) | Max.1178 mm (46 in.) | 1000 mm (39 in.) |
| CX-300 | Min.50 mm (2 in.)<br>( 50 to 540 mm (2 in. to 21 in.) , 582 to 915 mm (23 in. to 36 in.) ) | Max.915 mm (36 in.) | 737 mm (29 in.) |

There is no special restriction on length (vertical dimension), as long as it is 200 mm (7-7/8 in.) or more.
You can also use flat material such as standard-size and piece material. For more information, see “5-4 Loading Flat Material (Standard-size Material, Piece Material, Etc.).”
The grit rollers (pinch rollers that secure the material) vary from one model to another, and settable ranges are determined for the left and right movable pinch rollers. See “Material Loading Position” on the following page.
Setting a pinch roller outside the allowed range causes an error message to appear.

To cut off a piece of material with the separating knife, load the media within the range shown below.
Loading media outside this range may make it impossible to cut off the material with the separating knife.

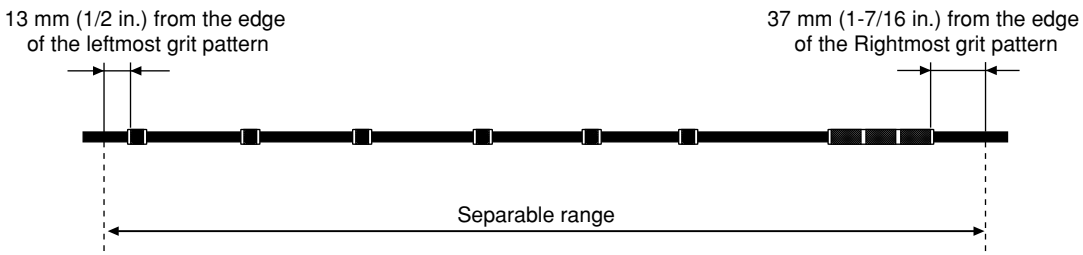

## ● Loading Roll Material

*** When performing lengthy cutting of 1.5 m (60 in.) or more, please refer to the section "5-3 To Perform Lengthy Cutting" that follows this one.**

For information on how to install the sheet hanger, shaft, brake, and stoppers, please refer to the "ASSEMBLY INSTRUCTIONS" for the PNS-502/402/302 (the stand for the CX-500/400/300).

**1** Mount the shaft at the location on the sheet hanger shown in the figure to match the outer diameter of the rolled material. If mounted at an incorrect position, the roll may fall.

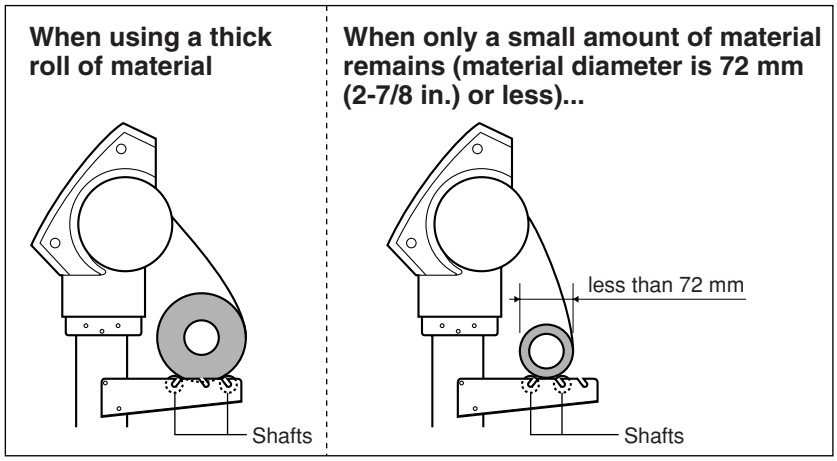


**2** Place the rolled material on the shaft.

**3** Lower the sheet loading levers and raise the pinch rollers. Release the brake and pass the end of the material between the pinch rollers and the grit rollers so that it extends from the front of the unit. You can easily load the material so that it is straight by pulling out the material until it is in line with the upper and lower guideline marks.

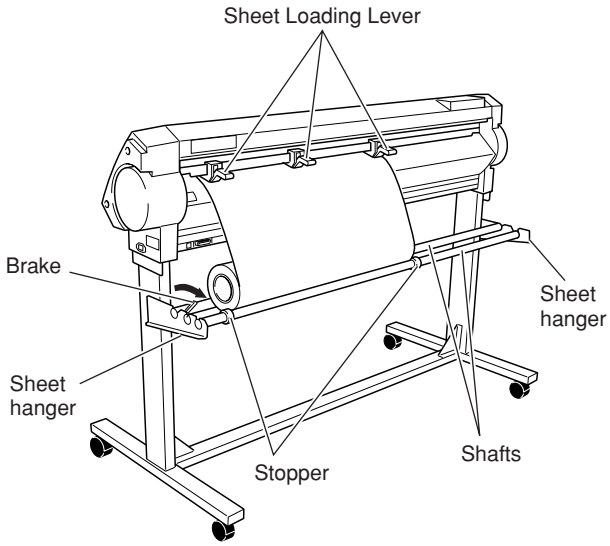


Performing high-speed cutting when only a little roll material remains may cause the roll to fall off the shaft. If this happens, it may help to pass the shaft through the roll.

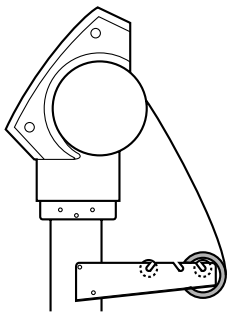

**4** Position the material so that its right edge lies over any of the grit patterns of the rightmost grit roller and its left edge simultaneously lies over any other grit roller.

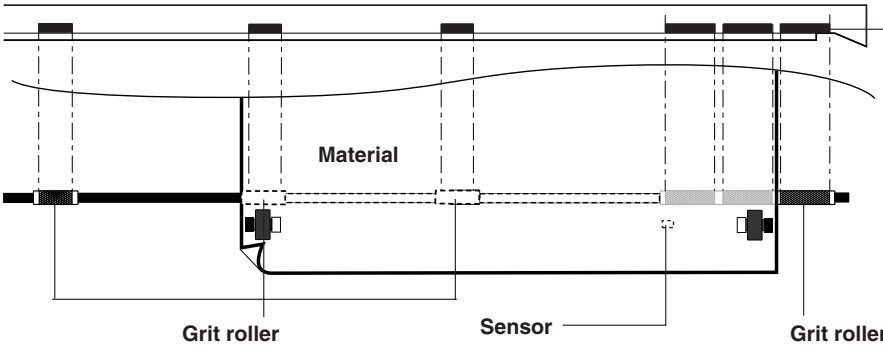


**With the material set in place, make sure the grit rollers are positioned correctly.**

Load the material so that it lies over the sensor on the platen.

## CX-500
### Material Loading Position

: Grit Roller
: Movable Pinch Roller (Left)
: Movable Pinch Roller (Middle)
: Movable Pinch Roller (Right)

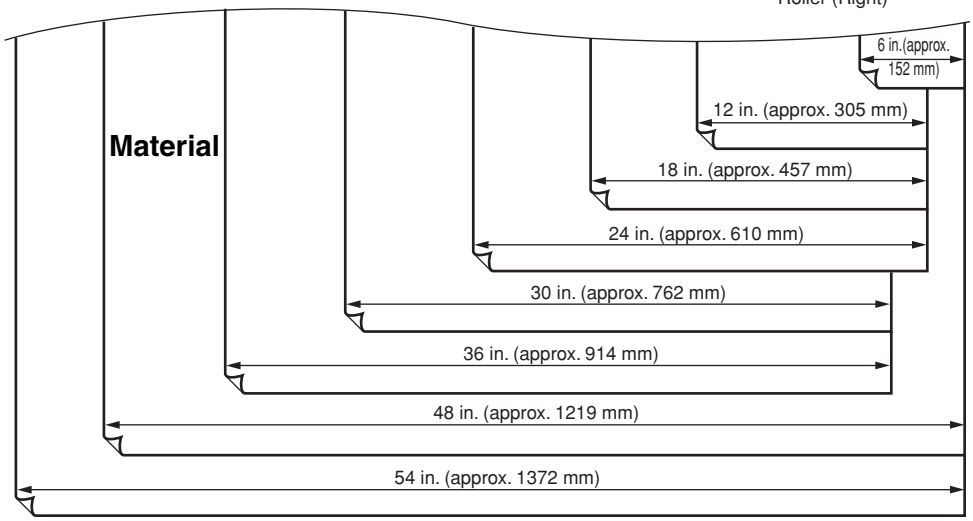


The right-hand movable pinch roller can be moved within this range. ⇔
When loading material with a width other than one indicated above, move the right-hand movable pinch roller.

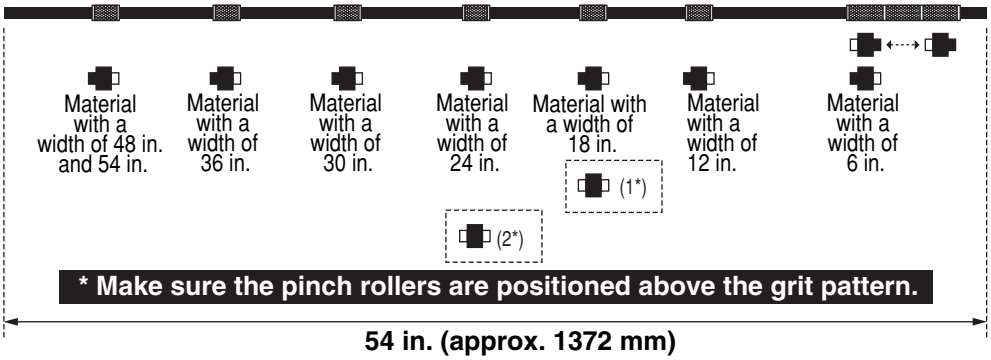


*** Make sure the pinch rollers are positioned above the grit pattern.**

**54 in. (approx. 1372 mm)**

(1*) Position of the pinch roller (middle) when using material with a width of 30 in. or 36 in.
(2*) Position of the pinch roller (middle) when using material with a width of 48 in. or 54 in.

## CX-400
### Material Loading Position

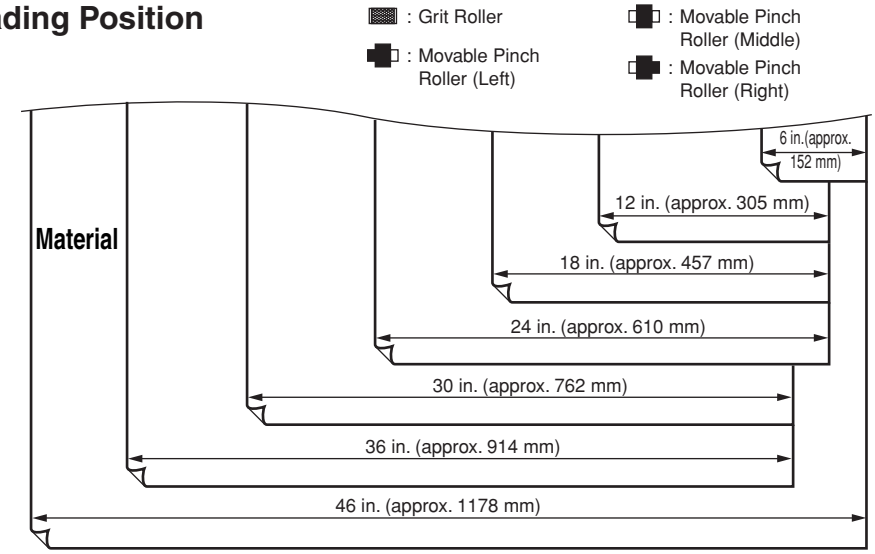


The right-hand movable pinch roller can be moved within this range. ⇔
When loading material with a width other than one indicated above, move the right-hand movable pinch roller.

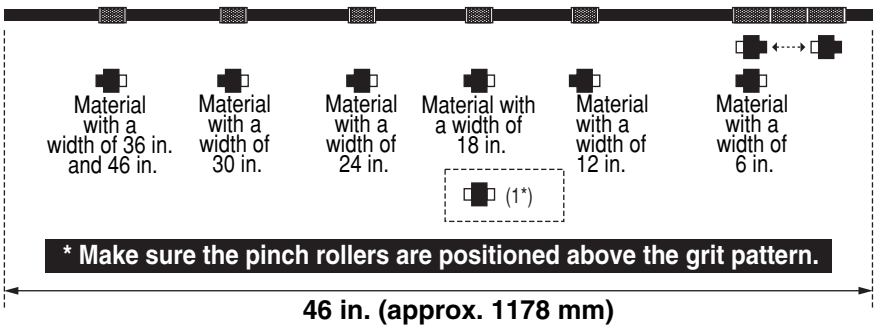


(1*) Position of the pinch roller (middle) when using material with a width of 30 in. or more.

## CX-300
### Material Loading Position

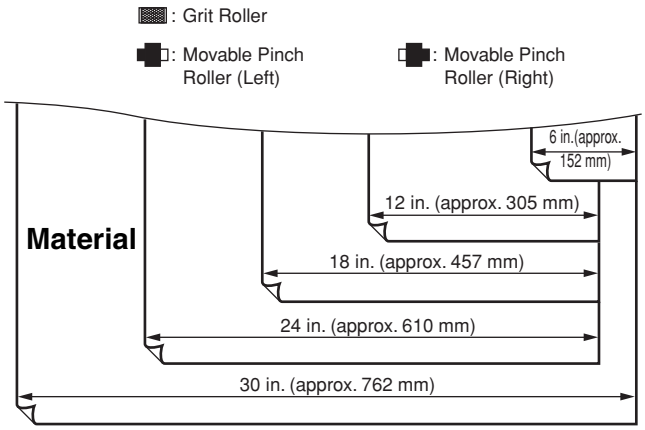


The right-hand movable pinch roller can be moved within this range. When loading material with a width other than one indicated above, move the right-hand movable pinch roller.

* Acceptable material widths 50 to 540 mm (2 in. to 21 in.), 582 to 915 mm (23 in. to 36 in.)

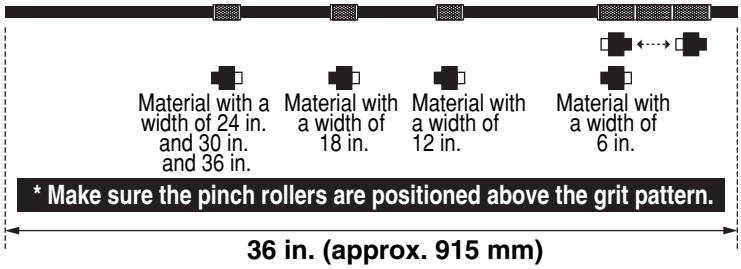


* The CX-300 has no middle pinch roller.

**5** Load the material so that it lies straight and is aligned with the guideline marks, then move the left and right pinch rollers so that they are above the grit rollers.
Position the middle pinch roller over the grit roller that lies between the left- and right-hand pinch rollers.
If the pinch rollers do not move smoothly, try moving them by grasping near the base of the sheet loading lever at the back of the unit. Load the material so that it is straight. If the material is crooked, straight material feed cannot be performed.

* The CX-300 does not have a middle pinch roller.

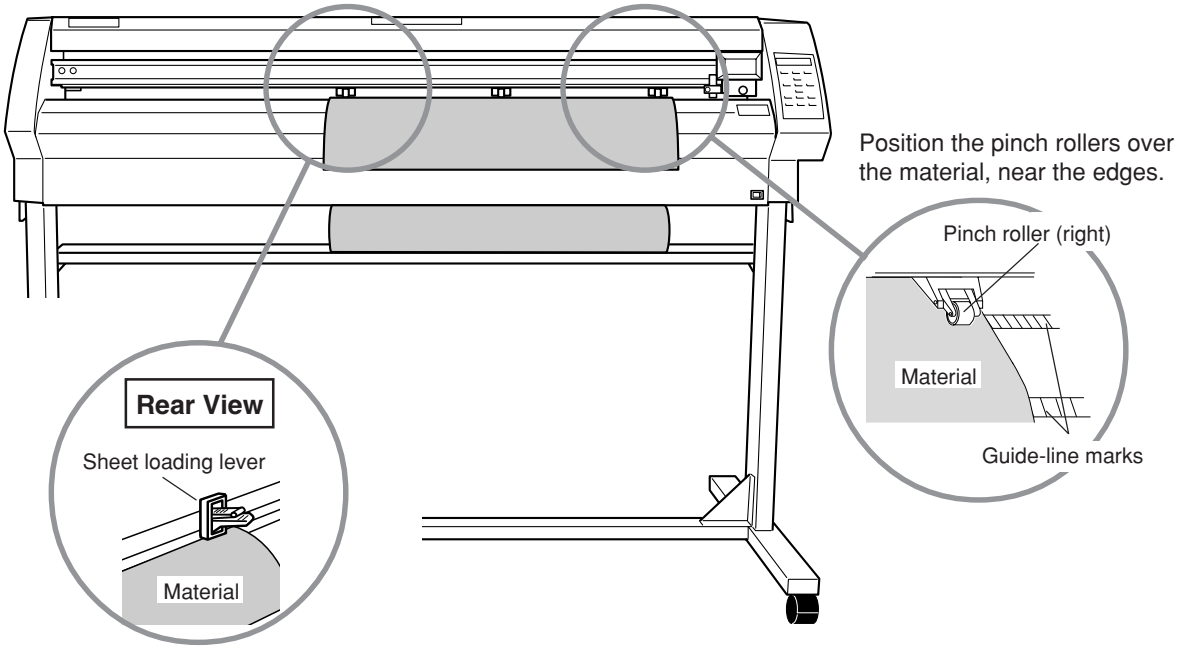


**6** Lift the sheet loading lever.
The pinch rollers are lowered and the material is secured in place.
When using a material which is narrower than 762 mm (30 in.), do not lower the middle pinch roller.

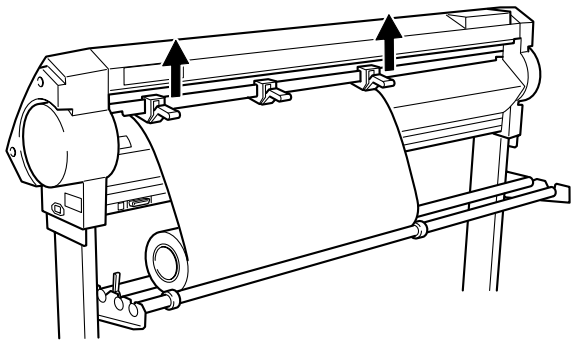

**7** Position the stoppers so that they lightly touch the edges of the roll and secure in place by tightening the screws so that the rolled material does not move from side to side during material feed.

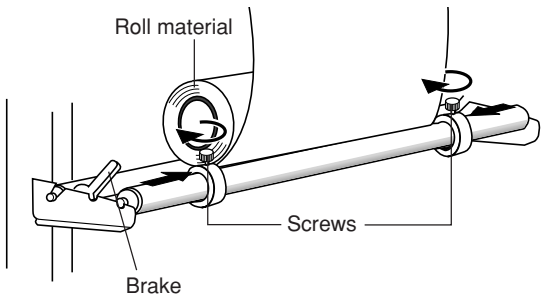

**8** Use the [ ◄ ] and [ ► ] keys to select [ROLL], then press the [ENTER] key.
For more information about selecting material, see "5-2 Details of the Origin-point Location and Cutting Area."

```
SELECT SHEET    ▶
ROLL PIECE      ↲
```

**9** The SETUP LED lights up, and the horizontal width of the material is detected and shown on the display.

```
W1195mm  L____mm
```



- If a pinch roller is positioned over an area where there is no grit roller, the message shown at right appears when you press the [ENTER] key.
  If this occurs, lower the sheet loading levers and move the pinch rollers to the proper positions above the grit rollers.
  Reposition the material to match this new alignment, then lift the sheet loading levers to hold the material in place.

```
Change Pinch
Roller Position
```

  When using roll material, before you perform cutting you need to pull out the required length of material from the roll.
  For more information, refer to "Material Test Feed" in "4-5 Starting Cutting".

# 4-2 Installing a Blade

## ⚠CAUTION



**Do not touch the tip of the blade with your fingers.**
Doing so may result in injury, and the cutting performance of the blade will be impaired.

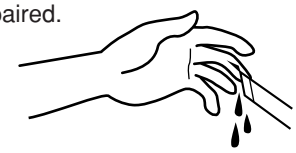

**NOTICE** Be sure to support the tool mounting screw from below when installing the blade holder. If installed without supporting the screw in this way, the blade tip may strike the blade protector, damaging the blade or blade protector and impairing cutting quality.

**1** Insert the pin into the blade holder.

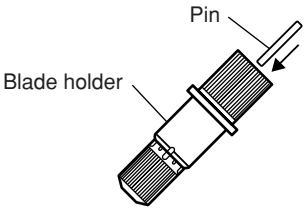


**2** Tighten the cap all the way.

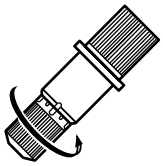

**3** Insert the blade.

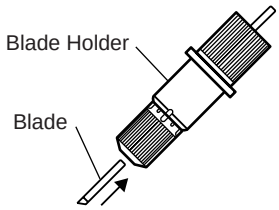


**4** (1) Loosen the tool securing screw on the tool carriage.
(2) Support the tool securing screw from below and install the blade holder. Insert the blade holder until the collar is flush with the carriage.
(3) Tighten the tool securing screw until the blade holder is secured in place.

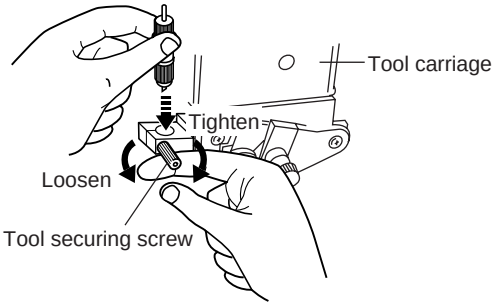


When you're using general sign material, use with the cap tightened all the way to the top (maximum amount of blade extension: 2.5 mm). When cutting material whose carrier paper is thin with respect to the adhesive layer (that is, the material thickness), or when performing half-cutting for material with no carrier paper, adjust the blade tip so that the tip does not pierce the carrier paper. For more information, see “5-1 Detailed Cutting-condition Settings.”

# 4-3 Adjusting the Blade Force and Cutting Speed

Before carrying out actual cutting, you may wish to perform a "cutting test” to check whether the unit produces the cutout satisfactorily.
The cutting test should be repeated until the appropriate cutting conditions for the material in use are discovered.

## ● Cutting Test

**1** Use the [ ▲ ], [ ▼ ], [ ◄ ] and [ ► ] keys to move the tool carriage to the place where the cutting test is to be performed.

- **Note that an area of approximately 2 square centimeters (a little less than a square inch) is required to make a test cutout (given that the tip of the cutter after it has moved is at the origin at lower-left).**

**2** Press the [TEST CUT] key for 0.5 seconds or more. After prefeeding once, cutting test starts.
The resulting cutouts will then appear as illustrated.

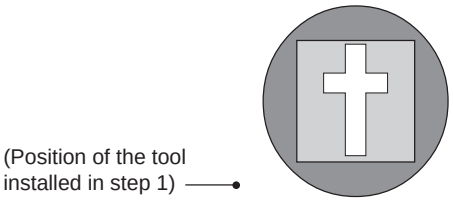


A cutting test (and prefeeding) are not possible immediately after you have used [SELECT SHEET] to choose [R-EDGE]. Use the [ ▲ ] key to feed the material several centimeters (1 or 2 inches) toward the rear, then execute the cutting test. You use [R-EDGE] when you are performing front loading. For more information, refer to "5-6 Front Loading."

**3** Check the state of cutting.

(1) Peel off the round section (marked by ▭ ).
→When it can be peeled by itself, without disturbing the square (marked by ▭ ), the cutter force is set appropriately.

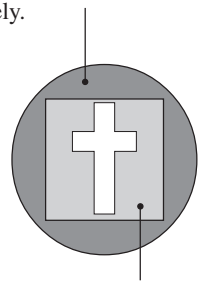

(2) Remove the square section (marked by ▭ ).
→The optimum blade pressure is correct if you can clearly make out the lines left by the blade.

### For Materials with a Strong Adhesive Layer

If you are using a material with a strong adhesive layer, the adhesive layer may adhere to itself immediately when cut. This means that even though the material has actually been cut, it may appear as if it has not been cut, and blade force may mistakenly be set too high.
If a cutting test shows that the material peels easily and the blade traces on the carrier paper are optimal, then the material is being cut. Take care not to set the blade force excessively high.

## ● Adjusting the Blade Force

Examine the result of the cutting test and adjust the blade force accordingly.

**1** Set the [PEN FORCE] slider at the center (default) position.

**2** Press the [FORCE] key to display the message at right.

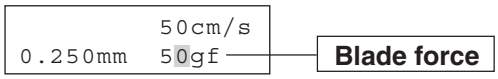


Setting range: 20 to 350 gf (in increments of 10 gf)

**3** Then use the [ ▲ ] and [ ▼ ] keys to change the numerical value, and press the [ENTER] key to enable the setting.

After using the control panel to set the blade force, if you want to raise or lower the blade force slightly, you can use the [PEN FORCE] slider to make fine adjustment.
Move the slider to the right or left to gradually raise or lower the blade force and set it at an appropriate value.
The range of the fine adjustment using the [PEN FORCE] slider is within 30 gf up or down from the value set with the control panel.
When using the control panel to set the blade force, move the [PEN FORCE] slider to its center (default) position.

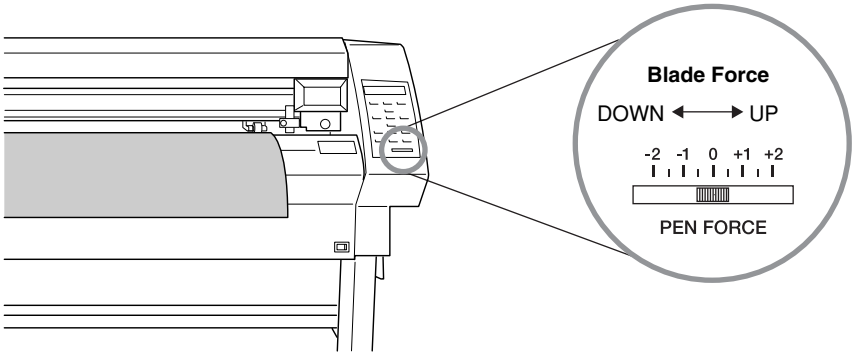

## ● Adjusting the Cutting Speed

Examine the results of the cutting test and adjust the cutting speed accordingly.

**1** Press the [SPEED] key to make the right appear on the display.

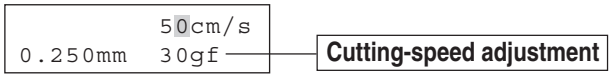


Setting range: 1 to 85 cm/s (settable in increments of 1 cm/s)

**2** Use the [ ▲ ] and [ ▼ ] keys to adjust the value, then press the [ENTER] key to enable the setting.

Incorrect cutting conditions may cause symptoms such as those described below.

**Blade force**

- The material peels during the cutting.
- The cutter requires frequency replacement.
- Cutting extends through the base paper, and normal advancing of the sheet becomes impossible.
- The blade protector is damaged.

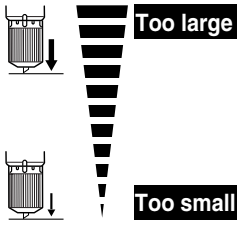


- Some parts of the sheet remain uncut.

**Cutting-speed**

- Uncut areas remain in places.
- The cut depth differs according to the location (nonuniform cutting depth).
- The material peels.
- The cut shape is distorted.

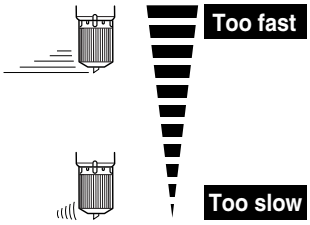


- Cutting takes a long time.

# 4-4 Setting the Origin Point

With the CX-500/400/300, you can set the location where cutting starts (the origin point) at any position.
If the default origin point in effect just after you perform setup by loading material and pressing the [ENTER] key is acceptable, then there is no need for you to explicitly set the origin point.
Setting the origin point at the point you want on the material lets you start cutting at any location you like, which can help reduce wasted material.

**1** Press the [ ▲ ], [ ▼ ], [ ◄ ] and [ ► ] keys to move the blade to the location where you want to set the origin point.

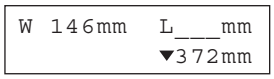


**2** Hold down the [ORIGIN] key for 0.5 seconds or longer.

# 4-5 Starting Cutting

## ● Material Test Feed

Perform test feed beforehand to ensure that the roll material is not pulled with undue force during cutting.
If the roll material is pulled with undue force during cutting, a motor error may occur, or the position may be displaced. Test feed can also be performed to make sure that the loaded material is straight.
Using the [AREA MOVE] feature makes it simple to perform test feed for the required portion.

**1** Make sure the brake is released.

**2** Press the [MENU] key to enter the menu mode, then press the [ ▼ ] key several times until the screen shown at right appears.

**3** Press the [ ► ] key to move to the setting screen, then use the [ ▲ ] and [ ▼ ] keys to make the setting for the required material length.
In the cutting data, set a length that is about 0.1 m longer than the required material length.
(Set the length for the value indicated by " ▼ ". " ▼ " signifies material feed toward the front, and " ▲ " signifies material feed toward the back. " ▲ " is used when front loading is employed. For more information, see "5-6 Front Loading." )

**4** Press the [ENTER] key. The screen changes to the one shown at right. Pressing the [ENTER] key once more feeds out the set length of material.
If the material is crooked and looks like it might come loose from the pinch rollers, press the [PAUSE] key, then hold down the [ENTER] key for 0.5 seconds or longer to stop material feed. Reload the material.

**5** Press the [ ◄ ] key to exit the menu mode.

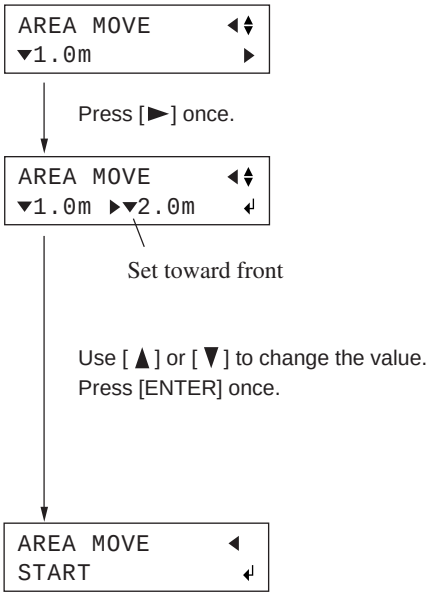


## ● Downloading Cutting Data

The unit will begin cutting when it receives cutting data sent from computer.

**NOTICE** If the material becomes dislodged or there is a problem in operation, then immediately press the [PAUSE] key or turn off the power switch on the right side of the machine.

Using the CX-500/400/300 to cut data created using a program requires the CAMM-1 driver.
The CAMM-1 driver is in the included Roland Software Package. For information on how to install it, take a look at the included "Startup Manual."

## ● To Sever the Material

With the CX-500/400/300, it is possible to cut off the material after performing cutting.
Holding down the [SHEET CUT] key for 0.5 seconds or more severs the material.

## ● Pausing Cutting Operations

If you want to stop the CX-500/400/300 momentarily while it is performing cutting, follow the procedure described below.

Press the [PAUSE] key.
Cutting is paused and the screen shown at right appears on the display.

```
CONTINUE▶PAUSE
STOP    ▶ENTER
```

### [Continue cutting]

Press the [PAUSE] key.
Cutting is resumed.

### [To Terminate Cutting]

First of all, stop the flow of data being sent by the computer.
Then hold down the [ENTER] key for 0.5 seconds or longer.
Cutting stops and the display returns to the top menu.

```
          50cm/s
0.250mm   50gf
```

## ● To Change the Cutting Speed or Blade Force During Cutting

You can change the settings during cutting by pressing the [SPEED] or [FORCE] key.

You can also perform fine adjustment in blade force while cutting is in progress by using the [PEN FORCE] slider.
For information on how to do this, see “4-3 Adjusting the Blade Force and Cutting Speed.”

# 4-6 When Cutting is Completed

## ⚠CAUTION

**When not in use for extended periods, unplug the power cord from the electrical outlet.**

Failure to do so may result in danger of shock, electrocution, or fire due to deterioration of the electrical insulation.

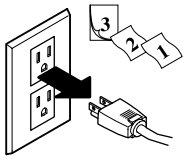


**NOTICE**

- Do not leave the tool securing screw tightened. Tightening the screw makes it more difficult to install the blade holder.
- Do not leave the machine with the pinch rollers lowered. The rollers may deform, making normal material feed impossible.

**1** Lower the sheet loading levers and remove the material.

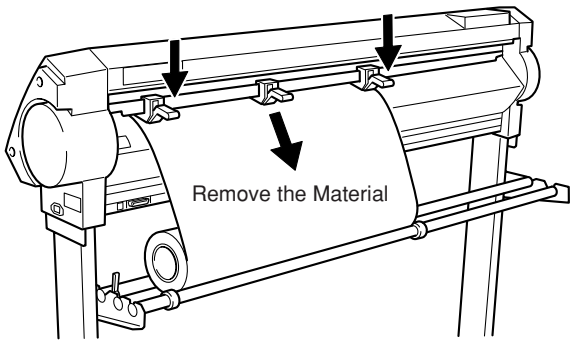


**2** (1) Loosen the tool securing screw on the tool carriage.
(2) Remove the blade holder from the tool carriage.

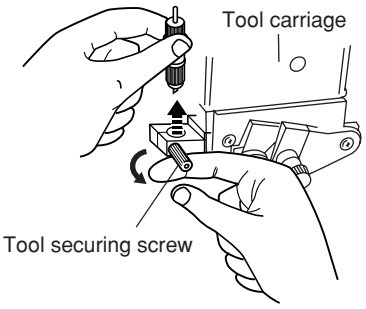


**3** Press the push-pin and remove the blade from the blade holder.
If a blade was used, wipe the blade with a soft cloth to remove any material that may cling to it.

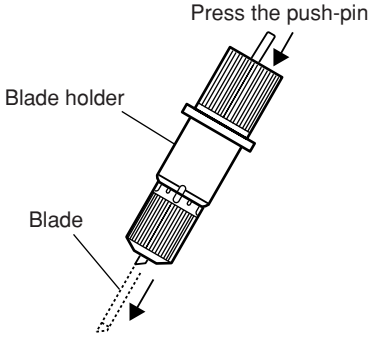

**4** Turn off the power.

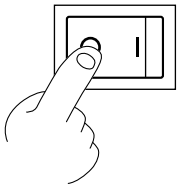

POWER/ERROR LED goes out



# 5 Advanced Operation

## 5-1 Detailed Cutting-condition Settings

### ● Adjusting the Blade Extension

When you want to perform accurate and fine adjustment of the cutting-in amount, such as when cutting material with thin carrier paper or when performing half-cutting of material having no carrier paper, you can obtain good results by adjusting the tip of the blade.

Each indicator tick corresponds to 0.1 mm, and adjustment for 0.5 mm can be made by rotating the cap one full turn.

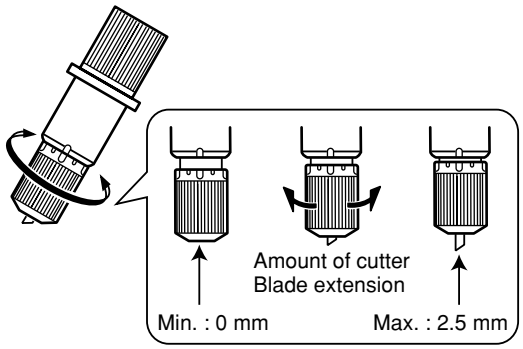


- Turn the cap portion to adjust the amount of blade extension, which is approximately equal to the cutting-in amount.
- Setting the blade force slightly higher than normal achieves a stable cutting-in amount.

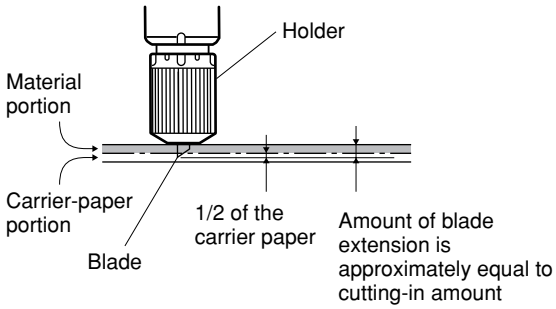


**[Rough Estimate for the Amount of Blade Extension]**

Use the following dimension as a rough estimate for setting the amount of blade extension.

$$\text{Amount of blade extension} = \text{Thickness of the material portion} + \frac{\text{Thickness of the carrier paper}}{2}$$

### ● Adjusting the Blade Offset

The blade offset is determined according to the blade. The included blade is designed to cut correctly at a setting of 0.25 mm, but adjustment may be required when using another type of blade. For information about the optimal offset for each blade, see “6 About the Blades and Materials.” Good results can also be obtained by performing fine adjustment of blade offset according to the material.

***1*** Press the [MENU] key to enter the menu mode, then press the [ ▼ ] key several times until the screen shown at right appears.



**2** Press the [► ] key to move to the setting screen, then use the [ ▲ ] and [ ▼ ] keys to enter the offset value.

**3** Press the [ENTER] key to enable the offset value.

**4** Press the [◄] key to exit the menu mode.

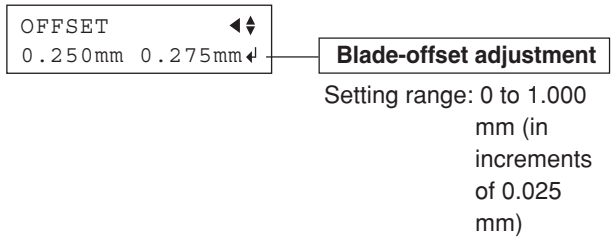


## ● Evaluating the Offset Through a Cutting Test

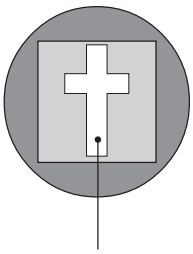

The remaining cross-shaped area is used to check whether the offset value is set correctly.

- When the offset value has been correctly set, the corners of the figure should appear cleanly cut as shown in A of the figure right.
- If the offset value is too small, the corners will appear slightly rounded as illustrated by B; an offset value which is too large will result in a cut figure similar to C.

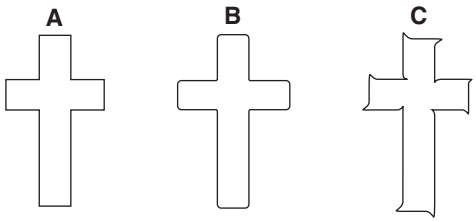


When you are adjusting the blade offset, we recommend first adjusting the blade force and the amount of blade extension.

## ● Changing the Speed When Raised (Up Speed)

With the CX-500/400/300, you can set the speed for movement to the next cutting location with the tool raised while cutting is in progress.
In cases such as when the material rises up over the platen and the surface of the material is damaged by the blade when the material moves forward and backward while the tool is raised, you can avoid problems by lowering the speed.

**1** Press the [MENU] key to enter the menu mode.

**2** Press the [ ▼ ] key several times until the screen shown at right appears.



**3** Press the [►] key to move to the setting screen, then use the [ ▲ ] and [ ▼ ] keys to enter the up speed.




**Adjusting the Up Speed**

Setting range: 1 to 85 cm/s (in increments of 1 cm/s)

**4** Press the [ENTER] key to enable the up speed.

**5** Press the [◄] key to exit the menu mode.

## ● Settings for Cutting Quality

You can select whether speed is given priority in cutting, or whether cutting quality is emphasized. This is also effective in preventing misalignment and motor errors when cutting heavy material.

**1** Press the [MENU] key to enter the menu mode.

**2** Press the [ ▼ ] key several times until the screen shown at right appears.




**3** Press the [►] key to move to the setting screen, then use the [ ▲ ] and [ ▼ ] keys to select the cutting quality.




**Adjusting Cutting Quality**

Setting range: NORMAL, HEAVY, HI-SPEED

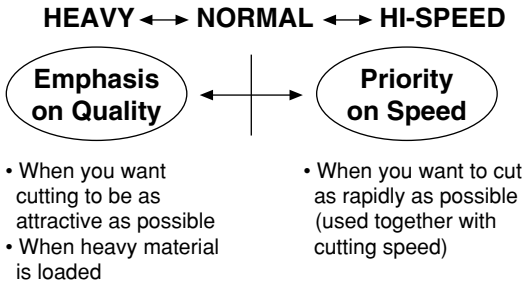


**4** Press the [ENTER] key to enable the cutting quality.

**5** Press the [◄] key to exit the menu mode.

# 5-2 Details of the Origin-point Location and Cutting Area

## ● The Location of the Origin Point Immediately After Loading Material

With the CX-500/400/300, the initial origin point is determined when you load material and press the [ENTER] key. The origin point that is initially determined when you press the [ENTER] key differs according to the selection made for [SELECT SHEET] with the operation panel when loading material.

| | |
|---|---|
| **[ROLL]** | **Set near the left-hand pinch roller** |
| **[PIECE]** | **Material size is detected and the origin is set at the lower-left area of the material** |
| **[F-EDGE]** | **Set at the front left edge of the material** |
| **[R-EDGE]** | **Set at the inner left edge of the material (When using the "Front loading")** |

For more information, see the following page.

* When [AXIS ROTATE] is set to [90deg], the initial origin point is set at the lower right with the X and Y axes rotated 90 degrees.

## The Location of the Origin Point Immediately After Loading Material (When [AXIS ROTATE] is set to [0deg])

### "ROLL" (When using roll material)

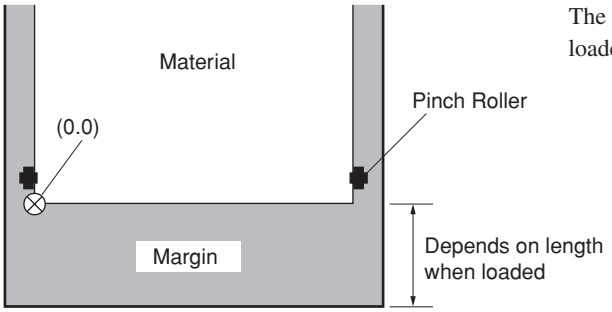


The origin point is set at the location where the material is loaded, near the left pinch roller.

### "PIECE" (When using flat material)

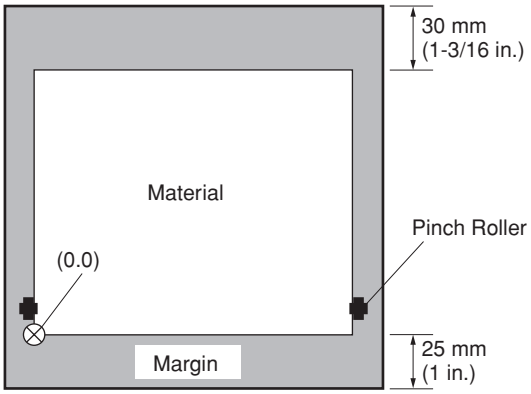


After length in the direction of material feed is detected, movement 25 mm back from the front edge of the material is performed, and the origin point is set near the left pinch roller.

* When the length of the material is 1,600 mm (63 in.) or longer, the material is determined to be roll material. The origin point is set in the same way as for "ROLL" above.

### "F-EDGE" (When performing cutting from as close as possible to the front edge of the material)

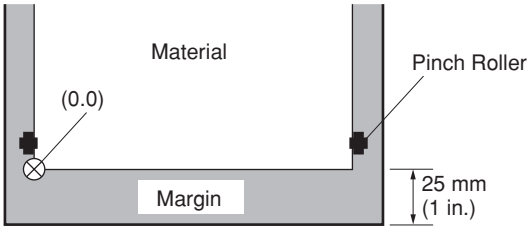


Set the origin point at a location having a margin of 25 mm from the front edge of the material.

### "R-EDGE" (When using the front-loading feature)

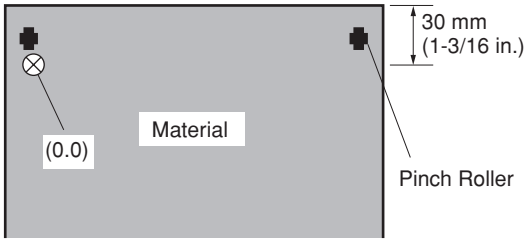


Set the origin point at a location having a margin of 30 mm from the trailing edge of the material.
When in this state, the cutting area is zero.

* For detailed information about the cutting area, see the following page.

## ● Coordinate Rotation Settings

This rotates the cutting coordinates by 90 degrees. The default setting is at [0deg], and the origin point is set at the lower left of the material. Setting this to [90deg] set the origin point at the lower right of the material and rotates the text (or graphics) by 90 degrees.

* Note that the coordinate axes change when rotated. Make the settings to match the program you're using. (When you are performing output using the CAMM-1 driver, set this to [0deg].)

When rotated 90 degrees, the X axis, Y axis, and origin point change as follows.

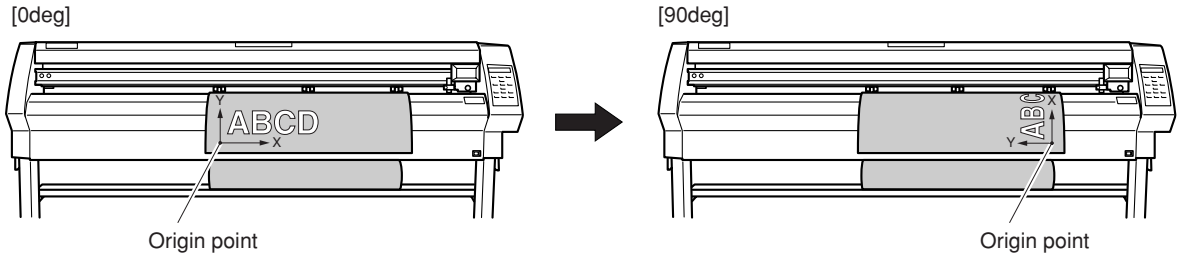


**1** Press the [MENU] key to enter the menu mode, then press the [ ▼ ] key several times until the screen shown at right appears.

```
AXIS ROTATE    ◀▲▼
0deg                ▶
```

**2** Press the [ ► ] key to move to the setting screen, then use the [ ▲ ] and [ ▼ ] keys to select [0deg] or [90deg].

```
AXIS ROTATE    ◀▲▼
0deg ▶90deg      ↵
```

**3** Press the [ENTER] key to enable the coordinates.
Press the [ ◄ ] key to exit the menu mode.

## ● About the Cutting Area

The cutting area along the horizontal plane (the direction in which the tool carriage moves) is determined by the position of the pinch rollers. The workable area spans the length between the two rollers, minus a margin of about 1 mm (about 0.04 in.) on both sides.
If the material length is greater than 1,600 mm (63 in.) when a flat material has been loaded, the CX-500/400/300 determines it to be a rolled material and sets the material length to 24,998 mm (984-1/8 in.). Also, when loading flat material (that is, when [PIECE] has been selected), a piece of material that is about 100 mm (3-15/16 in.) longer than the vertical size of the cutting data is required.

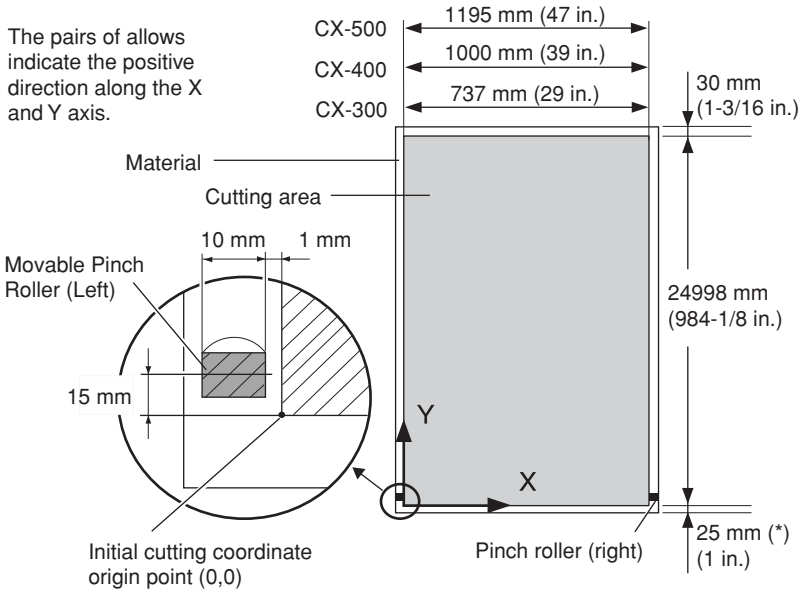


* When you select [F-EDGE] or [PIECE], this is 25 mm. When you select [ROLL], everything toward the front from the origin point is the margin. (See “The Location of the Origin Point Immediately After Loading Material” elsewhere in this section.) When you have separated the material using the [SHEET CUT] key, this is the value set for [MARGIN] at the [AUTOCUT MENU]. Refer to “7-3 List of Functions.”

# 5-3 To Perform Lengthy Cutting

**NOTICE** When performing material feed or cutting, be sure to release the brake.
Attempting to perform material feed or cutting with the brake engaged may make normal feed impossible and cause the material to slip and cause a motor error.

The longer is the cut material, the greater are the chances that the material will become crooked or come loose. This means that it is important to load the material straight, make sure the margins are wide enough, and perform test feed to check the material feed. The high-accuracy sheet hanger and brake on this machine can minimize crookedness of material.

Have on hand a piece of material that's at least 50 mm (2 in.) wider than the cutting width.
The chance of the material slipping loose from the pinch rollers can be reduced by braking the shaft and loading the pulled-out material while it's in a tensioned state, which lets you load the material straight. Follow the steps below to load the material.

***1*** Place the rolled material on the shaft and engage the brake for the shaft.

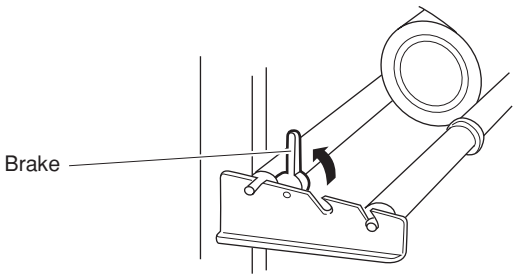

**2** Pull out the material from the roll and pass it through the unit.
Stretch taut, with no slackness.

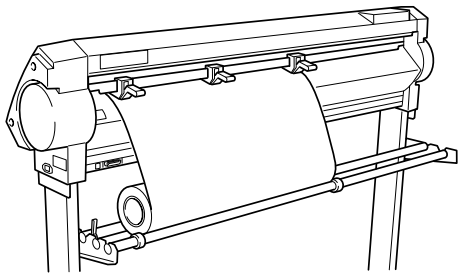

**3** Position the left- and right-hand pinch rollers as shown in the figure.
Position the middle pinch roller over the grit roller that lies between the left- and right-hand pinch rollers.

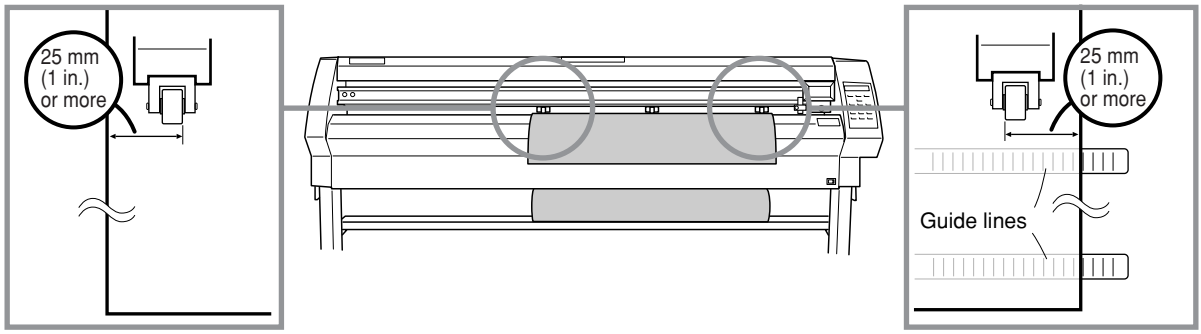


**4** While keeping the material stretched taut, raise the sheet loading lever to secure the material in place.
When using a material which is narrower than 762 mm (30 in.), do not lower the middle pinch roller.

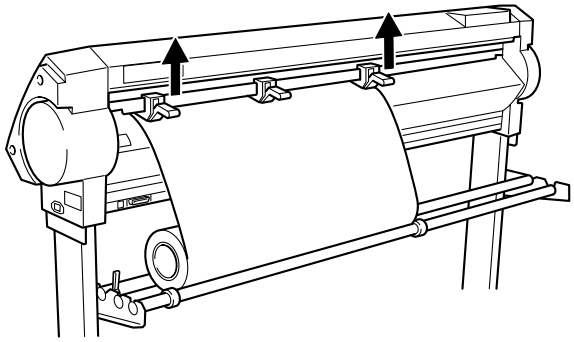

**5** Position the stoppers so that they lightly touch the edges of the roll, and secure in place by tightening the screws.

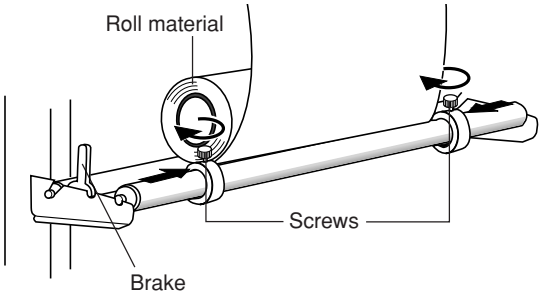


**6** Release the brake.

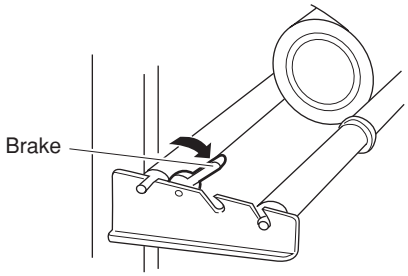

**7** Use the operation panel as follows to perform test feed for the material. The material is fed out by the set length. Make sure the material is not crooked.
If the material is crooked and looks like it might come loose from the pinch rollers, press the [PAUSE] key, then hold down the [ENTER] key for 0.5 seconds or longer to stop material feed. Reload the material.

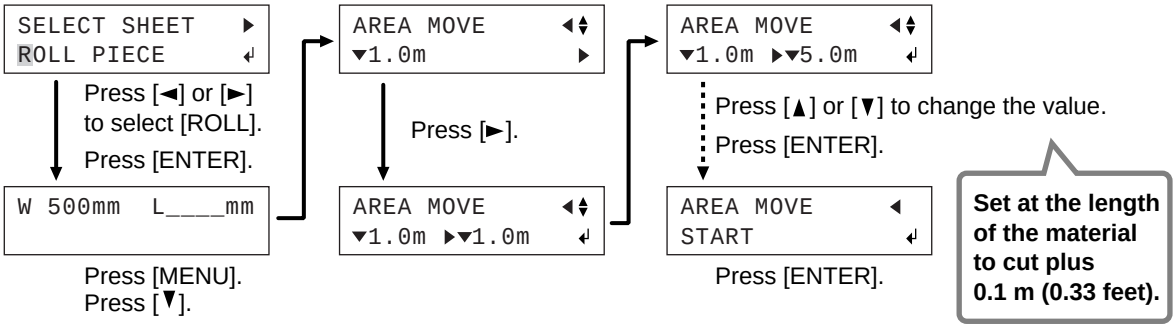


# 5-4 Loading Flat Material (Standard-size Material, Cut Material, Etc.)

In addition to roll material, you can also load flat material such as piece material on this machine.

If the material strikes the shaft during cutting, remove the shaft.

**1** Lower the sheet loading levers and pass the material between the pinch rollers and the grit rollers.

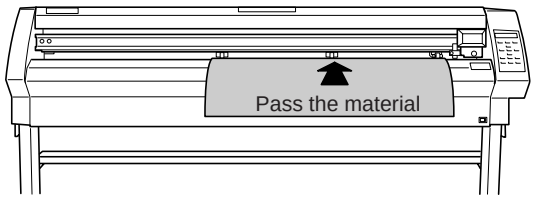


**2** Follow steps 4, 5, and 6 of "4-1 Loading the Material (Roll Material)" to load a piece of material.

**3** Use the [◄] and [►] keys to select [PIECE], then press the [ENTER] key.

SELECT SHEET
ROLL PIECE

**4** The tool carriage will move from side to side and the material will move forward and backward to detect the size of the material.
When sensing ends, the display shows the loaded material size.
* For more information about the cutting area, see "5-2 Details of the Origin-point Location and Cutting Area."

W 500mm L1000mm

● If a pinch roller is positioned over an area where there is no grit roller, the message shown at right appears when you press the [ENTER] key.
If this occurs, lower the sheet loading levers and move the pinch rollers to the proper positions above the grit rollers.
Reposition the material to match this new alignment, then lift the sheet loading levers to hold the material in place.

```
Change Pinch
Roller Position
```

When detecting the material size in step 4, if the material is misaligned and looks like it might come loose from the pinch rollers, or actually does come loose, please reload the material.

## 5-5 Repeating the Same Cutting

The “Replot” feature allows you to create numerous copies of same cutting.

**1** Press the [MENU] key to enter the menu mode, use the [ ▲ ] key to select [REPLOT], then press the [ ► ] key to display the replot execution screen.

```
REPLOT          ◀▲▼
START           ▶
```

**2** Pressing the [ENTER] key starts replotting.

```
REPLOT          ◀▲▼
START▶START     ↵
```

The Replot function calls up all data in the data buffer and performs cutting with this data. When performing replotting, follow the steps below to delete the data in the data buffer before send the data to be replotted from the computer.

**1** Carry out step 1 above.

**2** Use the [ ▲ ] and [ ▼ ]keys to select [CLEAR] and press the [ENTER] key to delete the data in the data buffer.

```
REPLOT          ◀▲▼
START▶CLEAR     ↵
```

**3** Use the [ ◄ ] key to leave the menu mode.

# 5-6 Front Loading

You can use the front-loading feature of the CX-500/400/300, which lets you load roll material at the front of the machine, by installing the sheet hanger on the front.

## ● Installing the Sheet Hanger

Install the sheet hanger on the front of the machine.
For an explanation of how assemble the unit and the stand (PNS-502/402/302), refer to the "ASSEMBLY INSTRUCTIONS" included with the stand.

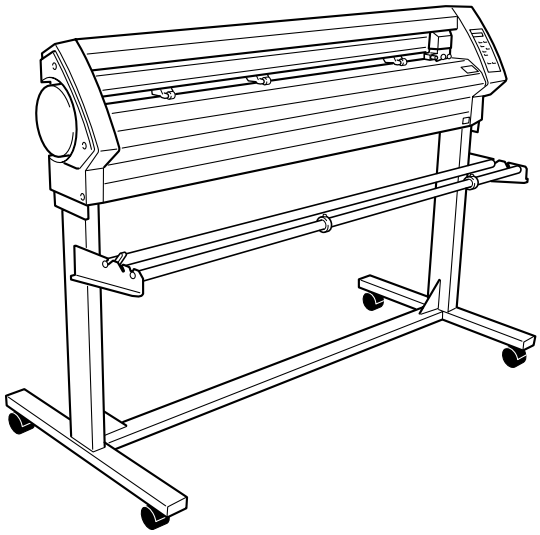

## ● Loading Material

**1** Refer to "4-1 Loading the Material (Roll Material)" and load the material.

**2** At [SELECT SHEET], select either [ROLL] or [R-EDGE]. Do not select [F-EDGE].

**3** Follow the steps in "Setting the Origin Point" in the next section to set a new origin point. In particular, not that if you have selected [R-EDGE], cutting cannot be performed unless you set a new origin point.

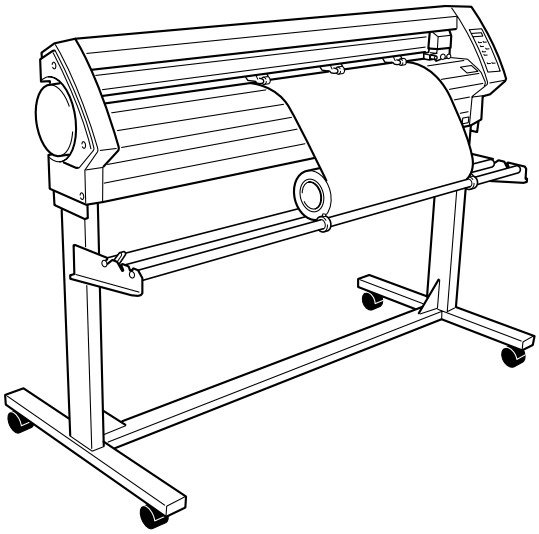



You cannot perform a cutting test immediately after you have selected [R-EDGE]. Use the [ ▲ ] key to feed the material several centimeters (1 or 2 inches) toward the rear, then execute the cutting test. There is no particular need to set the origin point.

## ● Setting the Origin Point

If you are using front loading, then when you make the setting for [SELECT SHEET] when loading the material, select either [ROLL] or [R-EDGE]. The origin-point location and the area where cutting is possible are as shown below. (The figure shows the case where [AXIS ROTATE] is set to [0 deg].)

**[ROLL]** **Set near the left-hand pinch roller**
**[R-EDGE]** **Set at the inner left edge of the material**

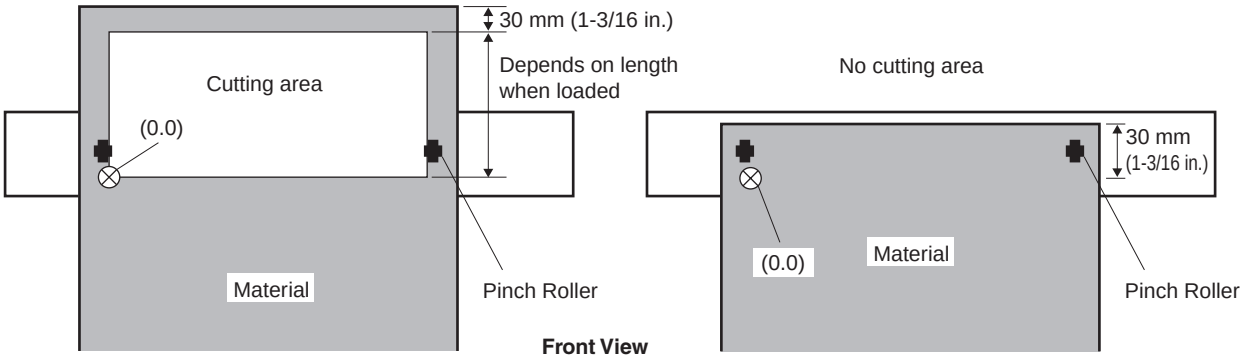


**When "ROLL" is selected** **When "R-EDGE" is selected**

The material is fed toward the front of the machine as cutting proceeds. The area where cutting is possible is to the rear of the origin point. Even when set to [R-EDGE] or [ROLL], it is necessary to feed the material toward the rear and then set a new origin point to make the required cutting area available.

When you are using front loading, the [AREA MOVE] feature can be a handy way to make the required cutting area available.

**1** Make sure the brake is released.

**2** Press the [MENU] key to enter the menu mode.

**3** Press the [ ▼ ] key several times until the screen shown at right appears.

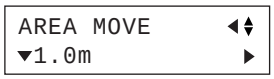


**4** Press the [ ► ] key to move to the setting screen, then use the [ ▲ ] and [ ▼ ] keys to set the required material length for cutting. Set a value that is about 0.1 m longer than the required material length in the cutting data. (If you are performing front loading, set the length to the value indicated by the " ▲ ". " ▼ " signifies material feed toward the front, and " ▲ " signifies material feed toward the back.)




Set toward rear

**5** Press the [ENTER] key. The screen changes to the one shown at right. Pressing the [ENTER] key a second time feeds the set length of material toward the rear of the machine. After material feed, the new origin point is automatically set at the lower left of the cutting area made available.




**6** Press the [ ◄ ] key to exit the menu mode. If the material is crooked and looks like it might come loose from the pinch rollers, or actually does come loose, please reload the material.

In addition to the preceding method, you can also set the origin point by using the [ ▲ ] and [ ▼ ] keys to feed out the required length of material to the rear of the machine, then pressing the [ORIGIN] key. At this time, the fed-out length appears on the display as shown at right.
For more information, see "4-4 Setting the Origin Point."

```
W 500mm  L____mm
      ▲250mm
```

## ● If You Are Using with the CAMM-1 Driver

As was explained in the previous section, when you're using front loading you need to take action to make the cutting area available, but when you're using the CAMM-1 driver you can perform this automatically.

**1** Open the CAMM-1 driver Properties window, click the [Options] tab, then select [Feed material before cutting]. Also, go to the [Size] tab and make the setting for [Cutting Area]. The cutting area of the size you set here is made available.

**2** Load material, then choose either [ROLL] or [R-EDGE].

**3** When you send cutting data from the computer, the material is fed toward the back without any cutting or printing performed. A new origin point is set and the cutting area is made available automatically. Cutting then starts.

**4** When cutting finishes, the tool returns to the origin point. When you send the next set of cutting data, leave the location of the tool unchanged.

The tool position when cutting starts is used as the point of origin for automatically making the cutting area available using [Feed material before cutting]. It makes no difference where the origin point has been set.
This operation changes as follows according to the setting for [Cutting Origin]. Selecting [Origin] always makes the cutting area available at the left edge. Selecting [Tool Position] makes the present tool position the point of origin not only for the direction of material feed but for the left and right tool directions as well.

* [Tool Position] : available only Windows 95/98/Me

**When [Origin] is selected**

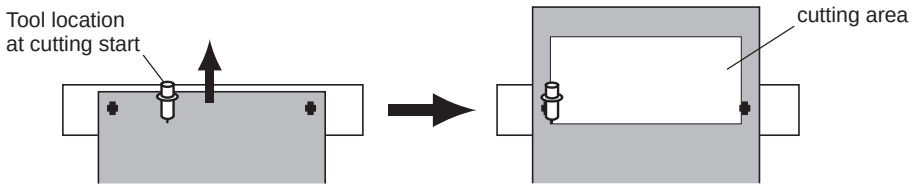


**When [Tool Position] is selected** * Windows 95/98/Me only

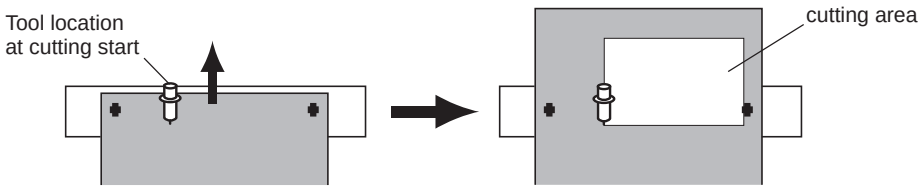

# 5-7 The Overcut Feature

This cuts an excess margin of 1 mm (0.04 in.) from the first and last line segments. This is effective when you want to finish with angles that are especially sharp, such as when cutting thick material.
This should normally be left set at [DISABLE]. When you want to cut especially attractive corners, set it to [ENABLE]. Note that when you are cutting small text and intricate shapes, cutting-in may occur on the portion of the material you are using, and so this should be set at [DISABLE].

Cutting results differ as shown in the following figures depending on whether the Overcut function is disable or enable.

**OVER CUT: DISABLE**

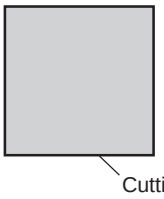


**OVER CUT: ENABLE**

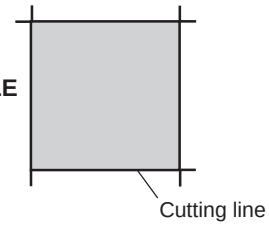


To set overcutting to [ENABLE], follow the steps below.

**1** Press the [MENU] key to enter the menu mode.

**2** Press the [ ▼ ] key several times until the screen shown at right appears.

```
SETTING MENU  ◀▲▼
              ▶
```

**3** Press the [►] key to move to the overcut menu.

```
OVER CUT      ◀▲▼
DISABLE       ▶
```

**4** Press the [►] key to move to the setting screen, then use the [ ▲ ] and [ ▼ ] keys to set to [ENABLE].

```
OVER CUT      ◀▲▼
DISABLE ▶ENABLE↵
```

**5** Press the [ENTER] key to enable the setting.

**6** Press the [◄] key to exit the menu mode.

# 5-8 The Preset Feature

With the CX-500/400/300, you can set and store eight types of cutting conditions for different tools and materials. You can call up the settings simply by using the [PRESET] key.

## ● To Store in Memory

**1** Use the display menu to make the settings for cutting conditions matched to the tool and material in use. You can set the following five types of parameters.

| | |
|---|---|
| **Blade force** | **: [FORCE] key** |
| **Offset** | **: Menu mode [OFFSET]** |
| **Cutting speed** | **: [SPEED] key** |
| **Cutting quality** | **: Menu mode [QUALITY]** |
| **Up speed** | **: Menu mode [UPSPEED]** |

**2** Press the [MENU] key to enter the menu mode.

**3** Press the [ ▼ ] key several times until the screen shown at right appears.




**4** Press the [►] key to move to the setting screen, then use the [ ▲ ] and [ ▼ ] keys to select the preset number for the conditions you want to store in memory.




**5** Press the [ENTER] key to enable the setting.

**6** Press the [◄] key to exit the menu mode.

Storing is now completed. When you store to a preset number, any cutting conditions already stored to the number are automatically updated (overwritten) with the newly set parameters. If you want to keep the previous cutting conditions, store them to a different number. You can store up to eight types of cutting conditions using the steps described above.

## ● Calling Up

**1** Press the [PRESET] key.

**2** Use the [ ▲ ] and [ ▼ ] keys to select the preset number you want to call up. The parameters set to the selected preset number appear on the display. You can use the [ ► ] and [ ◄ ] keys to confirm the set parameters.

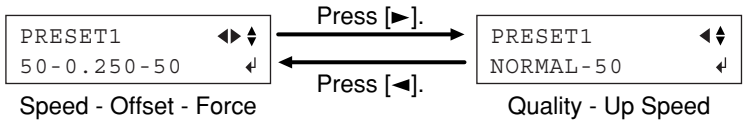


**3** Press the [ENTER] key. The preset number you selected is called up and the display changes as shown at right.

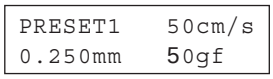


## ● Deleting Settings

You can delete the stored settings for cutting conditions, returning them to their factory defaults. Please note that all preset numbers from 1 to 8 are deleted.

**1** Press the [MENU] key to enter the menu mode.

**2** Press the [ ▼ ] key several times until the screen shown at right appears.




**3** Press the [ ► ] key to move to the [FACTORY DEFAULT] menu.




**4** Press the [ ► ] key to move to the setting screen, then use the [ ▲ ] and [ ▼ ] keys to select [PRESET].




**5** Press the [ ► ] key.

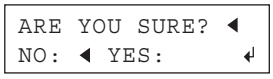


**6** Press the [ENTER] key.
The user settings stored at preset numbers 1 through 8 are deleted and the factory-default settings are restored.

**7** Press the [ ◄ ] key to exit the menu mode.

# 5-9 The Crop Mark Feature

Use this when you are creating stickers or the like with data created using a program in which printing data and cutting data are interlocked, and are cutting around figures that are already printed on the material.
With the CX-500/400/300, a material is always loaded parallel to the unit. This means that unless the graphics to be cut have been printed parallel to the material, the cutting lines become shifted from the graphics, and it becomes impossible to accurately cut around the graphics (see Figure A below).
If the printed graphics have crop marks, the positions of the crop marks can be stored in memory and used as reference points by the CX-500/400/300. By making this setting, it becomes possible to cut around graphics with accuracy even when the graphics have not been printed parallel to the material (Figure B).

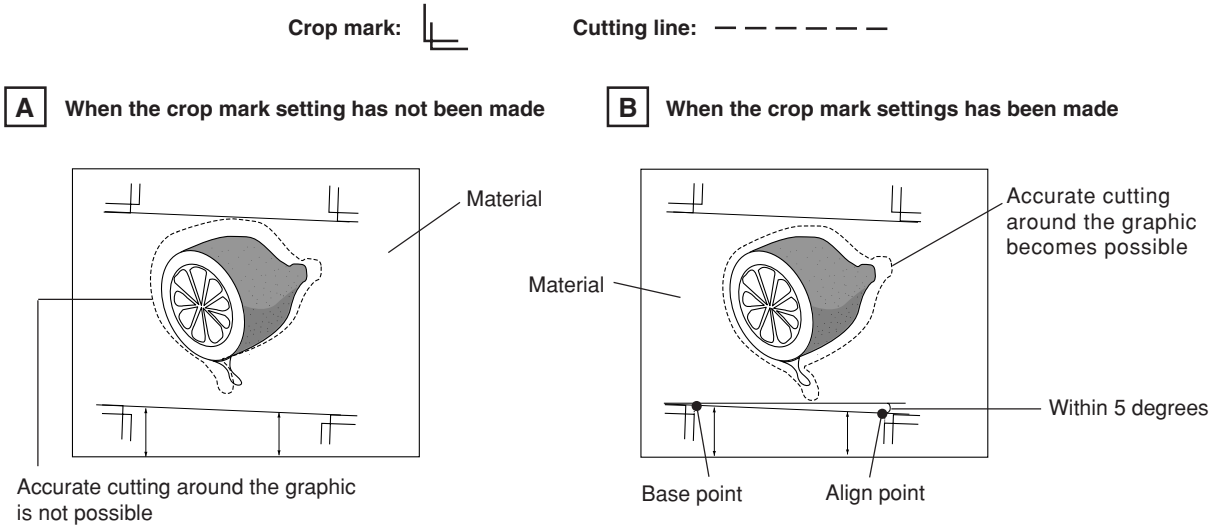


The methods for setting crop marks are described bellow. Please refer to the figures shown above while making this setting.

- The crop mark setting cannot be made if the angle of the base point and the align point is more than 5 degrees.
- Crop marks cannot be set when the [AXIS ROTATE] display menu is set to [90 deg].

Load the material (printed with a figure) and the included alignment tool (see “4-1 Loading the Material,” “4-2 Installing a Blade,” and “5-4 Loading Flat Material (Standard-size Material, Piece Material, Etc.)”). The installation of the alignment tool is the same as for the blade holder.

**1** Press the [MENU] key to enter the menu mode.

**2** Press the [ ▼ ] key several times until the screen shown at right appears.




**3** Press the [►] key to move to the [BASEPOINT] menu.



**4** Use the [◄], [►], [ ▲ ], and [ ▼ ] keys to move the tool carriage to the left of the crop mark printed on the material. Line up the alignment tool with the center of the crop mark. After the alignment tool has been positioned correctly, press the [ENTER] key. The display then advances to the menu for setting the align point.




**5** Use the [◄], [►], [ ▲ ], and [ ▼ ] keys to move the tool carriage to the crop mark printed at the lower right of the material. Line up the alignment tool with the center of the crop mark. After the alignment tool has been positioned correctly, press the [ENTER] key.

**6** When the crop mark setting has been made successfully, the display shows screen (A), then returns to the screen shown in step 2. Replace the alignment tool with a blade. If the crop mark setting could not be made, the display shows screen (B) before returning to the screen shown in step 2. If this happens, reload the material and make the setting again.

(A)




(B)




**7** When the settings are successful, use the [◄] key to quit the menu mode.

# 6 About the Blades and Materials

## 6-1 Blade and Material Combinations

This section indicates the proper cutting conditions for various types of materials, as well as blade life-span. Cutting conditions and blade life vary according to the hardness of the material and the usage environment. Making the settings for the conditions described below does not automatically guarantee attractive cutting results in all situations. Before performing actual cutting, be sure to carry out a cutting test and make any necessary adjustments (see "4-3 Adjusting the Blade Force and Cutting Speed"). If the material is not cut through completely even when the blade force is increased by 50 to 60 gf more than the blade force values shown below, it means that the useful life of the blade has ended. Replace with a new blade.

| Blade | Material | Blade force | Speed | Blade offset | Life of a blade (General guide) |
|---|---|---|---|---|---|
| ZEC-U1005 | General Signage Vinyl | 50 to 150 gf | 85 cm/sec. | 0.25 mm (0.01 in.) | 8000 m |
| | Polyolefin material | 100 to 200 gf | 85 cm/sec. | 0.25 mm (0.01 in.) | 2500 m |
| ZEC-U5025 | General Signage Vinyl | 30 to 100 gf | 85 cm/sec. | 0.25 mm (0.01 in.) | 4000 m |
| | Fluorescent Vinyl | 120 to 200 gf | 85 cm/sec. | 0.25 mm (0.01 in.) | 4000 m |
| | Reflective Vinyl | 100 to 200 gf | 85 cm/sec. | 0.25 mm (0.01 in.) | 4000 m |
| | Polyolefin material | 70 to 140 gf | 85 cm/sec. | 0.25 mm (0.01 in.) | 2500 m |
| ZEC-U1715 | Rubber material for sandblasting stencil | 100 to 200 gf | 20 cm/sec. | 0.25 mm (0.01 in.) | Varies according to material type |
| ZEC-U3017 | Signage vinyl (material thickness 0.1 mm or less) | 100 gf or less | 85 cm/sec. | 0.175 mm (0.007 in.) | 4000 m |

* The values for lifespan are intended to serve as a general guide when cutting materials of identical type.
* When you are cutting small text (character height of 3 mm for alphanumeric characters or more), ZEC-U3017 can produce more attractive cutting results than other blades.
* Use the included blade under conditions equivalent to those for the ZEC-U5025.

# 6-2 About Special Materials

## [Rubber materials for sandblasting stencils which can be cut]

A) Materials with a material thickness of 1 mm (0.04 in.) or less

B) Materials with only carrier paper on both flanks of the material (Position the left and right pinch rollers above the strips of carrier paper.)

C) Materials with carrier paper which is hard enough to withstand material feed




## [Material with sprocket-feed holes]

Material for sprocket-feed use has feed holes along both edges.
If the material is loaded with these holes lying over the pinch rollers, material feed cannot be performed correctly.
When you are using this with the CX-500/400/300, load it as shown in the figure.

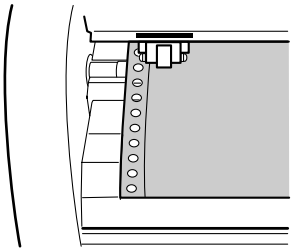

## [About the Separating Knife]

It may not be possible to sever some thicker materials (such as rubber sandblasting templates) or thin, flimsy materials.
Material with a strong tendency to reroll (that is, with a warp in the direction of the cutting surface) may catch on the carriage after being cut off. Do not sever those materials with the separating knife.

# 7 Descriptions of Features

## 7-1 Key Operations

This describes the key operations. Refer to this together with the display-menu flowcharts on the following pages to make settings using the menus.

### ● Direct Keys

[PRESET] Pressing any one of these three keys displays the setting screen.
[FORCE] Use [ ▲ ] and [ ▼ ] to change the setting value, then press [ENTER] to enable the setting.
[SPEED]

If you press another key without pressing [ENTER], the setting value does not change.

### ● Menu Mode

Pressing [MENU] enters the menu mode. Key operations in the menu mode are as follows.

[ ▲ ] [ ▼ ]
- Moving to the previous menu screen or the next menu screen
- Selecting a setting value
- Moving the material

[ ► ]
- Moving to the setting screen
- Moving the carriage

[ ◄ ]
- Moving to the previous screen (quitting the menu mode)
- Moving the carriage

[ENTER]
- Executing a menu item
- Enabling a setting

Pressing the [ ◄ ] key without pressing [ENTER] returns you to the previous screen without changing the setting.

**Guidance for Key Operations in the Menu Mode**
When you're in the menu mode, key-operation guidance appears at the right edge of the display. The keys shown on the display at that time are used for operation.

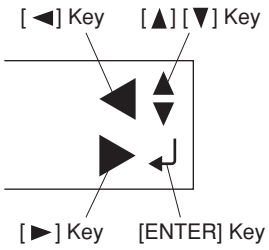

# 7-2 Display Menus Flowchart

For details about each of the menus, see the “7-3 List of Functions”.

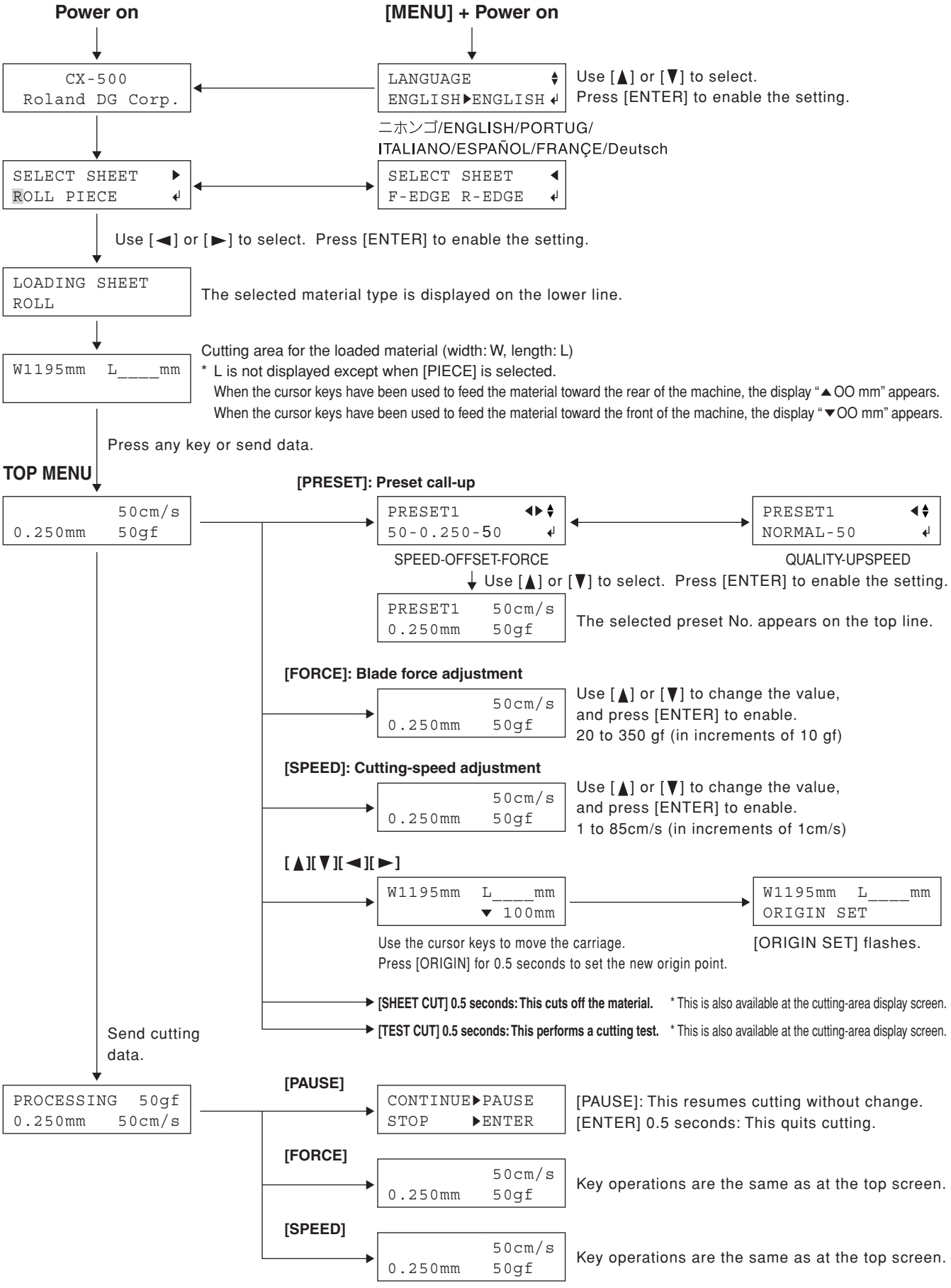

**[MENU]**

**MENU MODE**

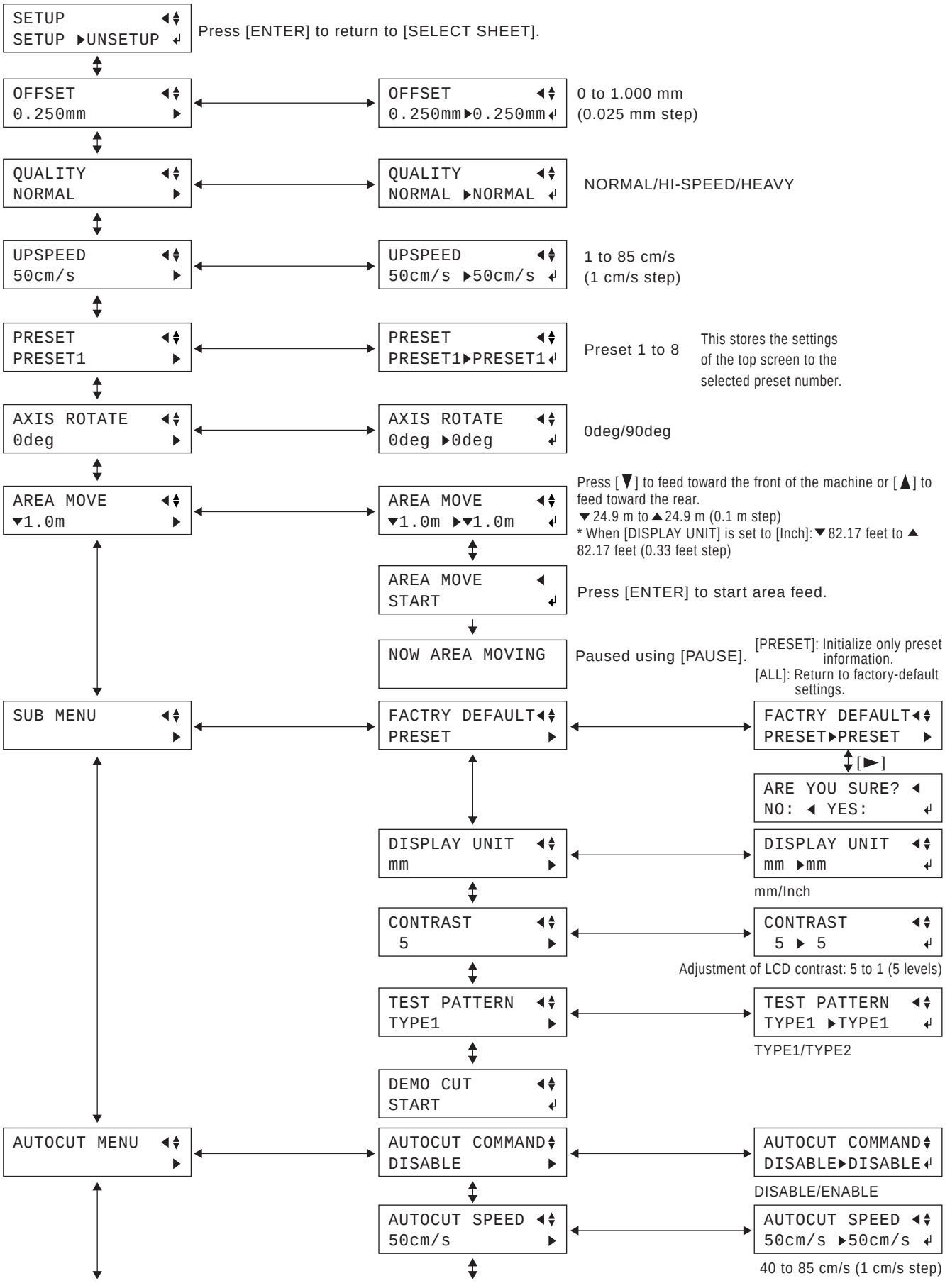

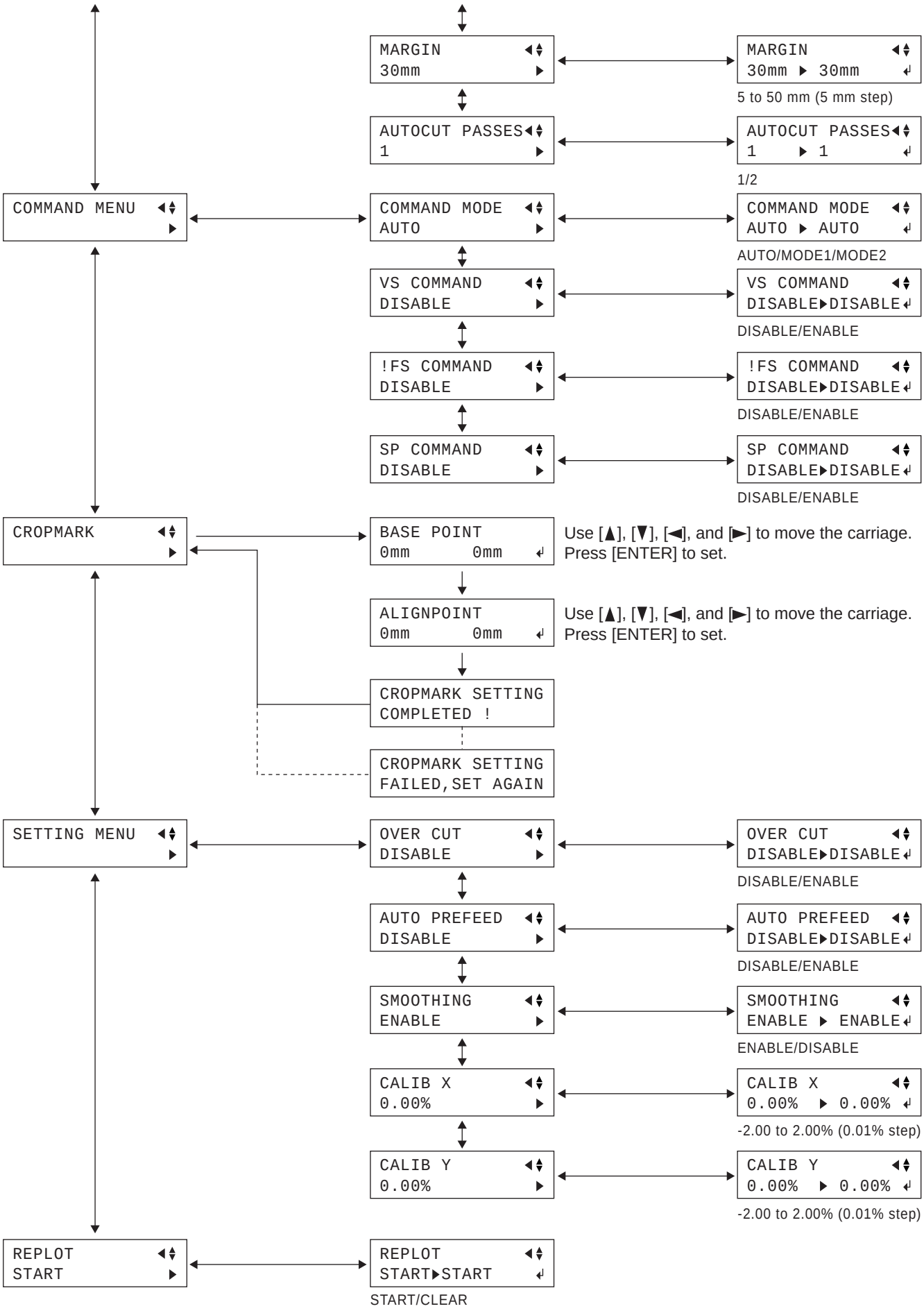
COMMAND MENU
MARGIN
30mm
MARGIN
30mm ▶ 30mm
5 to 50 mm (5 mm step)
AUTOCUT PASSES
1
AUTOCUT PASSES
1 ▶ 1
1/2
COMMAND MODE
AUTO
COMMAND MODE
AUTO ▶ AUTO
AUTO/MODE1/MODE2
VS COMMAND
DISABLE
VS COMMAND
DISABLE▶DISABLE
DISABLE/ENABLE
!FS COMMAND
DISABLE
!FS COMMAND
DISABLE▶DISABLE
DISABLE/ENABLE
SP COMMAND
DISABLE
SP COMMAND
DISABLE▶DISABLE
DISABLE/ENABLE
CROPMARK
BASE POINT
0mm 0mm
Use [▲], [▼], [◄], and [►] to move the carriage.
Press [ENTER] to set.
ALIGNPOINT
0mm 0mm
Use [▲], [▼], [◄], and [►] to move the carriage.
Press [ENTER] to set.
CROPMARK SETTING
COMPLETED !
CROPMARK SETTING
FAILED,SET AGAIN
SETTING MENU
OVER CUT
DISABLE
OVER CUT
DISABLE▶DISABLE
DISABLE/ENABLE
AUTO PREFEED
DISABLE
AUTO PREFEED
DISABLE▶DISABLE
DISABLE/ENABLE
SMOOTHING
ENABLE
SMOOTHING
ENABLE ▶ ENABLE
ENABLE/DISABLE
CALIB X
0.00%
CALIB X
0.00% ▶ 0.00%
-2.00 to 2.00% (0.01% step)
CALIB Y
0.00%
CALIB Y
0.00% ▶ 0.00%
-2.00 to 2.00% (0.01% step)
REPLOT
START
REPLOT
START▶START
START/CLEAR

# 7-3 List of Functions

## ● Control-key Functions

This describes the functions of the control keys when pressed.

| Key | Function | Range | Default |
|---|---|---|---|
| PRESET | This calls up user-set cutting conditions matched to the tool and material in use. | Preset 1 to 8 | – |
| FORCE | This sets the force for the blade during cutting. Perform a cutting test and set the conditions to match the loaded material and the installed blade. | 20 to 350gf (10gf step) | 50gf |
| SPEED | This sets the speed for the blade during cutting. Perform a cutting test and set the conditions to match the loaded material and the installed blade. | 1 to 85 cm/s (1 cm/s step) | 50 cm/s |
| CURSOR [▲] [▼] [◄] [►] | These move the material and the carriage. When a menu is displayed, these change the menu items and setting values. | – | – |
| PAUSE | This pauses cutting. The PAUSE LED lights up while operation is paused. Pressing this a second time cancels the paused state. To quit cutting, hold down [ENTER] for 0.5 seconds or longer. This key is also effective when performing material feed using the [AREA MOVE] menu. | – | – |
| MENU | This enters the menu mode. In the menu mode, use the [▲] and [▼] keys to move to the next menu, the [►] key to move to the setting screen, and the [◄] key to move to the previous screen. | – | – |
| ENTER | This enables, runs, or stores the item shown on the display. | – | – |
| ORIGIN | Holding down this key for 0.5 seconds or longer sets the origin point at the present blade position (the blade center). | – | – |
| SHEET CUT | Holding down this key for 0.5 seconds or longer cuts off the material at the present position of the separating knife. Press this to sever an already-cut piece of material from a roll of material. Severing cannot be performed while cutting is in progress. | – | – |
| TEST CUT | Holding down this key for 0.5 seconds or longer performs a cutting test at the present blade position. For more information, see “4-3 Adjusting the Blade Force and Cutting Speed.” | – | – |
| MENU + Power on (LANGUAGE) | This sets the language for messages on the display. You can select from among seven languages: Japanese, English, Portuguese, Italian, Spanish, French, and German. | ニホンゴ / ENGLISH/ PORTUG / ITALIANO/ ESPAÑOL / FRANÇE/ Deutsch | ENGLISH |
| Power on (SELECT SHEET) | This selects the type of material to use and enables the setup state. For more information, see “5-2 Details of the Origin-point Location and Cutting Area.” | ROLL/PIECE/ F-EDGE/R-EDGE | – |

## ● Description of Menu Items

This describes the items and functions available when you press [MENU] and enter the menu mode.

| Menu | | Function | Range | Default |
|---|---|---|---|---|
| SETUP | | This cancels material setup (unsetup). | – | – |
| OFFSET | | This sets the amount of offset for the blade during cutting. Perform a cutting test and set the conditions to match the loaded material and the installed blade. When using the included blade, cutting can be performed using the factory-default settings. | 0 to 1 mm (0.025 mm step) | 0.250 mm |
| QUALITY | | This sets the cutting quality. Ordinarily this is left set to [NORMAL]. When rapid cutting is desired, such as when cutting a large material, set this to [HI-SPEED]. When load is large, or if the material is not cut smoothly, or when small text is to be cut attractively, set this to [HEAVY]. | NORMAL/ HI-SPEED/ HEAVY | NORMAL |
| UPSPEED | | This sets the speed of movement when the blade is raised and moves to the next position for cutting during a cutting operation. | 1 to 85 cm/s (1 cm/s step) | 50 cm/s |
| PRESET | | It is possible to set the cutting parameters to match the blade and material, and store them for later use. Five items can be stored: cutting speed , blade offset, blade force, [UPSPEED], and [QUALITY]. These settings can be stored in memory as eight patterns (numbered 1 through 8). | Preset 1 to 8 | – |
| AXIS ROTATE | | This rotates the cutting coordinate origin by 90 degrees. The default setting is [0deg], which means that the origin is at the bottom left of the material. Setting this to [90deg] moves the origin to the bottom right of the material, thereby rotating the cutting pattern by 90 degrees.<br>* Don't forget that the coordinate axis changes when the origin is rotated. | 0deg/90deg | 0deg |
| AREA MOVE | | This moves the material by the length to be cut before actual cutting is performed, making it possible to ensure that the material will not slip or come loose during cutting. When performing continuous cutting on the same material, this can also be used to make sure that there is enough remaining material to cut the data that will be sent.<br>When you are performing front loading, this feeds the specified length of material to the rear to ensure the cutting area, and shifts the origin point.<br>You can pause or stop material feed by pressing the [PAUSE] key during execution. | 24.9 m toward the front to 24.9 m toward the rear | 1.0 m toward the front |
| SUB MENU | FACTORY DEFAULT | Selecting [ALL] returns the settings values of the menu items to their factory-default values.<br>Selecting [PRESET] returns only the cutting conditions store in preset 1 through 8 to their factory-default values. | PRESET/ALL | – |
| | DISPLAY UNIT | This sets the unit of measurement used for coordinate values shown on the display.<br>When you make the setting with the [AREA MOVE] menu, selecting [mm] displays values in meters and selecting [Inch] displays values in feet. | mm/Inch | mm |

| Menu | | Function | Range | Default |
|---|---|---|---|---|
| | CONTRAST | This changes the contrast of the display. | 5 to 1 | 5 |
| | TEST PATTERN | This changes the cutting-test pattern carried out when you press the [TEST CUT] key.<br>This performs an ordinary cutting test with [TYPE 1]. For thin materials or cases where graphics are too small to obtain good cutting results with [TYPE 1], make the setting for [TYPE 2].<br>TYPE 1 TYPE 2<br> | TYPE1/TYPE2 | TYPE1 |
| | DEMO CUT | This performs an operation check when the CX-500/400/300 is not working correctly. | – | – |
| AUTOCUT MENU | AUTOCUT COMMAND | This selects whether the material-cutoff command is enabled or disabled.<br>When set to [ENABLE], material cutoff is performed automatically when a material-cutoff command is sent from the computer.<br>Pressing the [SHEET CUT] key performs material cutoff regardless of whether the setting is [ENABLE] or [DISABLE]. | DISABLE/ENABLE | DISABLE |
| | AUTOCUT SPEED | This sets the [AUTOCUT] (material cutoff) speed.<br>Set this to a suitable speed for the loaded material. | 40 to 85 cm/s (1cm/s step) | 50 cm/s |
| | MARGIN | This sets the amount of margin from the cut edge of the material for the next starting point for cutting after cutting off the material. | 5 to 50 mm (5mm step) | 30 mm |
| | AUTOCUT PASSES | This sets the number of times material cutoff is performed (once for [1] or twice for [2]). When working with thicker material or other material that's difficult to cut, set this to [2]. Pressing the [SHEET CUT] key once performs material cutoff the number of times set here. | 1/2 | 1 |
| COMMAND MENU | COMMAND MODE | This selection enables the type of instructions that are understood by the unit. You can set the unit to accept either CAMM-GL III mode 1 instructions or mode 2 instructions.<br>When set to [AUTO], the CX-500/400/300 automatically detects the type of instructions first received after turning on the power, and sets itself to accept those instructions.<br>To change the type of instructions, first change the setting, then switch the power to the unit off and back on again. | AUTO/ MODE1/ MODE2 | AUTO |
| | VS COMMAND | To perform cutting at the speed determined by a VS command (tool speed setting command) sent from the computer, set this to [ENABLE]. When set to [DISABLE], cutting is performed using the values for [SPEED] and [UPSPEED]. | DISABLE/ENABLE | DISABLE |
| | !FS COMMAND | To perform cutting at the blade force determined by an FS command (tool force setting command) sent from the computer, set this to [ENABLE]. When set to [DISABLE], cutting is performed using the values for [FORCE]. | DISABLE/ENABLE | DISABLE |

| Menu | | Function | Range | Default |
|---|---|---|---|---|
| | SP COMMAND | This is normally set to [DISABLE] when performing cutting. When a tool-selection instruction (SP instruction) is sent from the computer while this is set to [DISABLE], the SP instruction is ignored and operation continues without pause. When set to [ENABLE], SP exchange instructions are accepted and operation pauses. If tool change is needed, change the tool, then press the [ENTER] key. | DISABLE/ENABLE | DISABLE |
| CROP MARK | | This is used when cutting materials with alignment marks (crop marks) printed around the graphics, such as for making stickers or seals. The crop marks are set as reference points and correction points, enabling the graphics to be cut with accuracy. | – | – |
| SETTING MENU | OVER CUT | This cuts an excess margin of 1 mm (0.04 in.) from the first and last line segments.<br>This selection is normally set to [DISABLE], and is set to [ENABLE] when cutting especially attractive corners is desired. When cutting small text or intricate graphics, however, this should be set to [DISABLE] to avoid cutting into the material. | DISABLE/ENABLE | DISABLE |
| | AUTO PREFEED | Set to [ENABLE] for automatic material feed at cutting. If this is set to [ENABLE], when cutting data is sent from the computer, the plotter will automatically execute cutting after a 1 m (39-3/8 in.) feed toward the front. (Some data may cause feed over 1 m (39-3/8 in.), such as when the next point of movement is located more than 1 m (39-3/8 in.) to the rear.)<br>* If the [AREA MOVE] function is used to feed the material in advance, the material will not be automatically fed even when [AUTO PREFEED] is set to [ENABLE]. | DISABLE/ENABLE | DISABLE |
| | SMOOTHING | If you want the curves of circles and arcs to be cut smoothly, set this to [ENABLE]. When on, however, small text or intricate designs may also be cut with rounded corners. If this happens, change the setting to [DISABLE] and perform cutting again. | ENABLE/DISABLE | ENABLE |
| | CALIB X | This adjusts the respective distances of the X axis. Compare the actual measurements of the cutting results with the data sent from the computer to calculate and set the distance adjustment value. | -2.00 to 2.00 % | 0.00 % |
| | CALIB Y | This adjusts the respective distances of the Y axis. Compare the actual measurements of the cutting results with the data sent from the computer to calculate and set the distance adjustment value. | -2.00 to 2.00 % | 0.00 % |
| REPLOT | | This cuts the data in the replot buffer. Selecting [CLEAR] causes existing data in the replot buffer to be deleted. | | |

# 8 Maintenance

## 8-1 Cleaning

**NOTICE**

Always turn off the CX-500/400/300 before cleaning it.

Never lubricate the mechanisms.

Do not clean with solvents (such as benzine or thinner).

### [Cleaning the body]

Use a cloth moistened with water then wrung well, and wipe gently to clean. Wipe the operation panel and display gently with a clean, soft cloth.

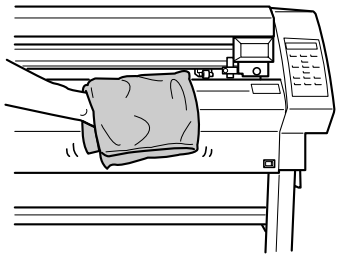

### [Cleaning the platen]

Use a cloth moistened with water then wrung well, and wipe gently to clean.

### [Cleaning the grit rollers]

With the sheet loading levers lowered and the pinch rollers raised, use a commercially available brush to remove dust and other detritus. Brush horizontally while rotating the grit rollers.
If dust builds up it may prevent the material from being held securely, and degrade plot precision.

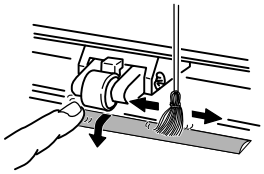

### [Cleaning the pinch rollers]

Lower the sheet loading levers and raise the pinch rollers.
Use a cloth moistened with water then wrung well, and wipe gently to clean.

### [Cleaning the blade holder cap]

If material debris is adhering to the inner surface of the cap for the blade holder, loosen and remove the cap, then remove the material debris.
If corners and curves are not cut attractively, or if cutting is discontinuous, clean the blade holder cap.

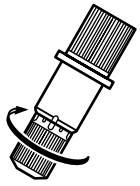

# 8-2 Consumable Items

## [Blade]

If any of the following occurs, it means the blade has reached the end of its useful life. Replace with a new blade.

- The blade tip is broken.
- Uncut areas remain even when blade force is raised 50 to 60 gf.
- Cutting traces are not as attractive as they were previously.
- When cutting details or corners, the material layer peels away from the carrier paper.

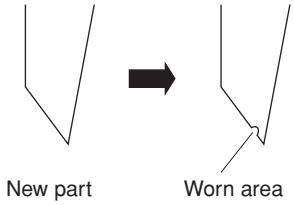


After prolonged use or cutting of hard material, the tip of the blade may become worn as shown in the figure. Attractive cutting becomes impossible in such cases, so replace with a new blade.

## [Blade holder]

When you adjust the blade tip and carry out cutting, the cap portion of the blade holder rubs against the material as cutting is performed, and so the end of the cap gradually becomes worn. When wear is severe, the blade tip cannot be adjusted correctly, and attractive cutting becomes impossible. Replace with a new blade holder.

When the blade holder has been in use for a prolonged period, the bearing that supports the blade deteriorates, impeding rotation of the blade. Continued use while in this state may make attractive cutting impossible because the blade tip cannot rotate easily.

If corners and curves are not cut attractively, or if cutting is discontinuous, refer to “8-1 Cleaning” and clean the blade holder cap. If this does not improve the results, replacing the blade holder may bring about improvement.

## [Blade protector]

If cutting is carried out when the amount of blade extension or blade force is not adjusted correctly, the blade tip may pierce the material's carrier paper, resulting in damage to the blade protector. Performing cutting with a damaged blade protector may make attractive cutting impossible.

When the surface of the blade protector is deformed by scratching or the like, it is necessary to replace the blade protector. Contact your authorized Roland DG Corp. dealer. Replacement is a charged service operation.

# 8-3 How to Replace the Separating Knife

## ⚠CAUTION

**Make sure the power to the unit is off before attempting to replace the separating knife.**
Doing so may result in injury.

If the separating knife, replace it with the replacement knife included with the CX-500/400/300. Follow the steps below to replace the knife.

**1** Switch off the power to the CX-500/400/300.

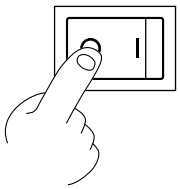

**2** Remove the separating knife.
(1) Loosen the screw until it slips out.
(2) Grasp the screw portion, and slowly pull it out in the direction of the arrow.
* Do not pull back while doing this.

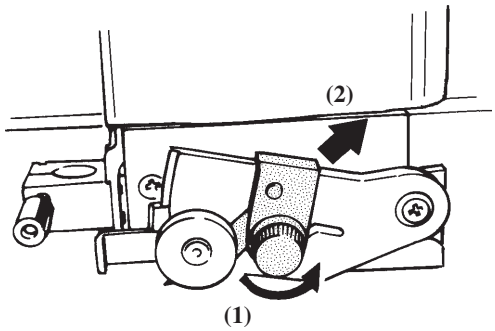


* If the blade remains in the carriage, use tweezers to remove it.

**3** Replace with a new knife.

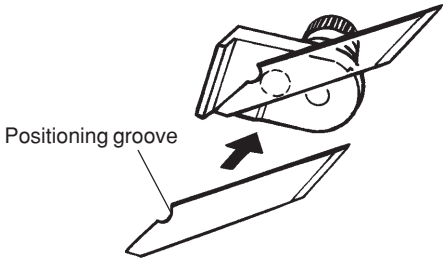


The knife is secured in place by the magnet.

**4** Install the separating knife.
(1) Grasp the screw portion and slowly insert it into the groove.
* Take care to ensure that the knife does not slip
(2) Tighten the screw.

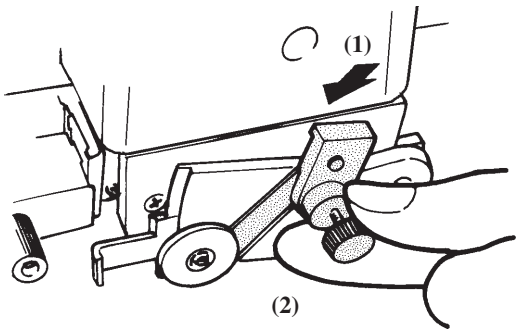

# 9 If There Is a Problem

## 9-1 Self-test Operation Check

The CX-500/400/300 is provided with a self-test feature for verifying that operation is correct. If the CX-500/400/300 does not operate correctly, follow the steps below to check its operation.
(No computer is required to perform an operation check.)

**1** Refer to “4-1 Loading the Material (Roll Material)” and load material.

**2** Refer to “4-2 Installing a Blade” and install the blade holder in the tool carriage.

**3** Press the [MENU] key to enter the menu mode.

**4** Press the [ ▼ ] key several times until the screen shown at right appears.




**5** Press the [►] key to move to the submenu.




**6** Use the [ ▲ ] and [ ▼ ] keys to select [DEMO CUT].




**7** Press the [ENTER] key.
The operation check starts. Operation is correct if the cutting shown in the figure is performed.

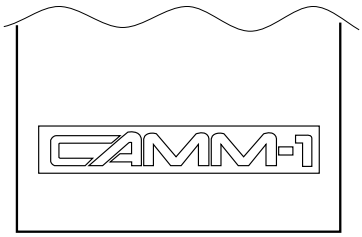

# 9-2 What to do if...

## CX-500/400/300 Troubleshooting

| | |
|---|---|
| **Is the power cord connected correctly?** | Connect the power cord included with the CX-500/400/300 to the unit, and plug the other end securely into an electrical outlet (see “3-2 Connection”). |
| **Is the CX-500/400/300 power on ?** | Turn on the power. |
| **Is the CX-500/400/300 in the temporary halt state ? Is operation paused?** | If the screen shown at rights is displayed, it means that operation is paused.<br>To resume cutting, press the [PAUSE] key again.<br>To abort cutting, first stop the flow of cutting instructions from the computer. Then hold down the [ENTER] key for 0.5 seconds or longer.<br>`CONTINUE▶PAUSE`<br>`STOP ▶ENTER` |
| **Are the computer and the CX-500/400/ 300 linked with the right cable ?** | The type of cable you need is determined by your computer and the software you are using. Even if the computer is the same, running different software may require a different cable. Use the cable specified in your software. |
| **Is the machine in the setup state?** | If the SETUP LED is not lit, cutting cannot be performed even when data is sent. |
| **Are the settings for the software driver correct?** | Make the correct settings for the output port. |
| **Are the computer and the CX-500/400/ 300 connected correctly?** | Correctly connect the computer and the CX-500/400/300 (see “3-2 Connections” ). |
| **Is the OS set up correctly ?** | Check the following items:<br>• Output port selection • Output device selection • Other settings<br>Check the OS’s user’s manual and set it up correctly. |
| **Are the application software settings correctly ?** | When specifying the output device, select the name of a model that supports the instruction set. If the instruction set is different, completely different instructions may be sent, resulting in an error. Settings for the output origin point and the like may also be required.<br>Check the software user’s manual and set it up correctly. |
| **Is the machine in the menu mode?** | When the menu is displayed, cutting is not performed even when data is received. Quit the menu mode. |

## A message appears on the display

| | |
|---|---|
| Change Pinch<br>Roller Position | **The location of one or more of the pinch rollers is not correct.**<br>If this happens, lower the sheet loading levers and move the pinch rollers to the proper positions above the grit rollers. Reposition the material to match this new alignment, then lift the sheet loading levers to hold the material in place. (See "4-1 Loading the Material (Roll Material)") |
| SHEET UNLOADED<br>LOAD AGAIN | **This is displayed when the material has been loaded at a position where the sheet sensor does not function.**<br>Follow the steps under "4-1 Loading the Material (Roll Material)" to load the material so that it is positioned above the sheet sensor.<br>**This is displayed when the material is removed after pressing the [ENTER] key.**<br>Load a material and press any key to cancel the error message. |
| Motor Err 00800080<br>Power ON Again | **Shows motor error status.**<br>This is displayed when the CX-500/400/300 is heavily loaded, such as during a media jam, when heavy stock is cut across a long distance without initial material feed, or when the material is abruptly pulled from the roll during cutting.<br>In this case, turn the power off and back on again (if a media jam has occurred, clear the jam before turning the power back on).<br>For large cutting data with a roll material, use the [AREA MOVE] function on the display menu to feed the roll material by the length of the cut (ensure a small margin by setting a length that is about 0.1 m longer than the cutting data).<br>When you are using thick material, change the [QUALITY] setting from [NORMAL] to [HEAVY]. (See "7-3 List of Functions" and refer to [QUALITY].) If the foregoing message appears and operation stops even when you perform cutting while set to [HEAVY], switch the power off and back on, then press [SPEED] and set [** cm/s] to a smaller value. (See "7-3 List of Functions.") |
| TOOL-CHG:TOOL No.<br>2 | **The machine is in standby for tool replacement.**<br>If tool replacement is not necessary, then simply press [ENTER].<br>The [SP COMMAND] menu item should normally be set to [DISABLE]. |

## Cut lines are uneven or not cut attractively

| | |
|---|---|
| **Are the blade and blade holder installed correctly and securely ?** | Install these so that there is no looseness (see “4-2 Installing a Blade” ). |
| **Are there material debris in the blade holder?** | Remove the cap from the blade holder and clean out the debris. (Refer to “8-1 Cleaning.”) |
| **Is a thick material being used?** | When you are using thick material, set the [QUALITY] to [HEAVY]. (Refer to “5-1 Detailed Cutting-condition Settings”) |
| **Has the blade holder deteriorated?** | Replace with a new blade holder. (Refer to “8-2 Consumable Items”) |
| **Is the blade protector damaged?** | Replace with a new blade protector. (Refer to “8-2 Consumable Items.”) |
| **Is the blade offset set correctly?** | Set at an appropriate value. (Refer to “5-1 Detailed Cutting-condition Settings”) Also, depending on the program you're using, you may be able to set the offset with the program. In such cases, make sure that the program setting does not conflict with the machine's setting. |

## Uncut areas remain or the material is not cut

| | |
|---|---|
| **Is the blade chipped ?** | If it is, replace it with a new one (see “4-2 Installing a Blade” ). |
| **Are blade force, blade offset, and cutting speed appropriate for the material being cut?** | Carry out a cutting test and set the appropriate values. (Refer to “5-1 Detailed Cutting-condition Settings” and “4-3 Adjusting the Blade Force and Cutting Speed.”) |

## The carrier paper is cut

| | |
|---|---|
| **Are the amount of blade extension and blade force appropriate for the material being cut?** | Adjust the amount of blade extension and the blade force appropriately. (Refer to “5-1 Detailed Cutting-condition Settings” and “4-3 Adjusting the Blade Force and Cutting Speed.”) |

## The material rise up during cutting, or the blade scratches the material

| | |
|---|---|
| **Is a wide material being used?** | When using a material with a width greater than 762 mm (30 in.), lower the middle pinch roller at a position near the center of the material. |
| **Is the up speed too fast?** | Use the menu to lower the setting for [UPSPEED]. (Refer to “5-1 Detailed Cutting-condition Settings.”) |

## The start and end points for cutting do not match

| | |
|---|---|
| **Are the blade and blade holder installed correctly and securely ?** | Install these so that there is no looseness (see “4-2 Installing a Blade” ). |
| **Are you using thick or hard material?** | When you are cutting thick or hard material, the start point and end point may not match. |

## Blank areas are produced on the material

| | |
|---|---|
| **Are the blank areas due to the specifications?** | Mechanical limitations produce margins at the front, back, left, and right of the material. (Refer to “5-2 Details of the Origin-point Location and Cutting Area.”) |

## Flat material cannot be set up as "PIECE" (the length is not displayed)

| | |
|---|---|
| **Is the length 1.6 m (63 in.) or longer?** | Attempting to set up flat material having a length of 1.6 m or longer as [PIECE] causes the material to be recognized as roll material. (Refer to “5-2 Details of the Origin-point Location and Cutting Area.”) |

## The Material slips away from the pinch rollers during the cutting process

| | |
|---|---|
| **Is a material with sprocket holes being used?** | If a material with holes for sprocket feed is being used, placing the pinch roller above the hole portion may cause the material to slip. Be sure to set the pinch roller over the material to the inner side of the hole portion. |
| **If a flat material (such as a standard-size material or piece material) has been loaded, has the “PIECE” setting been selected for the material type?** | When loading the material, select [PIECE] for the [SELECT SHEET] display menu (refer to “5-4 Loading Flat Material (Standard-size Material, Cut Material, Etc.)”). |
| **Is the material being cut blocked at some position?** | Make sure that the left and right edges of the material do not touch the inner surfaces, the shafts of the CX-500/400/300 during cutting. Such contact may not only damage the material, but could also make normal material advancing impossible and cause the material to slip. |
| **Is the material being cut loaded straight?** | If the front edge of the material you are working with is at an angle, cut off the odd-shaped part to make it straight, then align it so that it is parallel with the grit roller.<br>If the material is fed for a long distance, the material will be less likely to slip out of alignment if the pinch rollers are moved inward slightly (5 to 25 mm).<br>When a roll material is loaded, use the display menu [AREA MOVE] function to feed a material by the length to be used (ensure a small margin by setting a length that is about 0.1 m longer than the cutting data), make sure the pinch rollers are still in contact with the material (not off the left or right edges, or on the edges), and then cut.<br>If the material is pulled while cutting it is more likely that material misalignment and motor errors will occur. |
| **Are the sheet loading levers lowered?** | The material is not secured in place. Make sure the left and right pinch rollers are inside the edges of the material, then raise the sheet loading levers. |
| **Are the pinch rollers damaged or deformed?** | If the material comes loose even when it is loaded correctly, the useful life of the pinch rollers has ended. If this happens, contact your authorized Roland DG Corp. dealer. Replacement is a charged service operation.<br>Also, when you are not performing cutting, leave the sheet loading levers lowered and the pinch rollers raised. |

# 9-3 Error Messages

An error message will appear if incoming data has any of the errors listed in table. Since the error is shown in the display for informational purposes, the data transfer continues and you are allowed to perform the next operation.
To clear the display, press any key.
If an error occurs, correct cutting may become impossible.

The error messages that may appear on the display are described below.
In almost all cases, the cause is receiving incorrect data. For information about corrective action, go to “9-2 What to Do If...” and refer to “CX-500/400/300 Troubleshooting.”

| Error massage | Meaning |
|---|---|
| Er1:Command Not Recognized | Appears if an instruction that the CX-500/400/300 cannot interpret is sent. Additionally, this error is generated if an instruction from the “mode2” set is sent when the unit has been set to recognize “mode1,” or vice versa. Change the setting for the recognized instruction set, using the display menu, and this error should no longer occur. |
| Er2:Wrong Number of Parameters | Appears if the number of parameters differs from the permissible number. |
| Er3:Out of Parameter range | Appears if the value specified for a parameter is out of the permissible range. |
| Er5:Unknown Character Set | Appears if an unusable character is specified. |

# 10 Specifications

## 10-1 Specifications

| | | CX-500 | CX-400 | CX-300 |
|---|---|---|---|---|
| **Mechanism** | | Media-movement method | | |
| **Driving method** | | Digital control servo motor | | |
| **Maximum cutting area** | | Width: 1195 mm (47 in.)<br>Length: 24998 mm (984-1/8 in.) | Width: 1000 mm (39 in.)<br>Length: 24998 mm (984-1/8 in.) | Width: 737 mm (29 in.)<br>Length: 24998 mm (984-1/8 in.) |
| **Acceptable media widths** | | Min. 90 mm (3-1/2 in.) /<br>Max. 1372 mm (54 in.) | Min. 90 mm (3-1/2 in.) /<br>Max. 1178 mm (46 in.) | Min. 50 mm (2 in.)/ Max. 915 mm (36 in.)<br>(50 to 540 mm (2 in. to 21 in.),<br>582 to 915 mm (23 in. to 36 in.)) |
| **Width of material that can be cut off** | | 0 to 1270 mm (0 in. to 50 in.) | 0 to 1067 mm (0 in. to 42 in.) | 0 to 812 mm (0 in. to 32 in.) |
| **Tools** | | Cutter blades: Special blade for CAMM-1 series | | |
| **Max. cutting speed** | | During cutting: 850 mm/sec. (in all directions) During tool-up: 1202 mm/sec. (in 45° direction) | | |
| **Cutting speed** | | 10 to 850 mm/sec. (in increments of 10 mm/sec.) | | |
| **Blade force** | | 20 to 350 gf | | |
| **Mechanical resolution** | | 0.0125 mm/step (0.000492 in./step) | | |
| **Software resolution** | | 0.025 mm/step (0.000984 in./step) | | |
| **Distance accuracy** | | Error of less than ± 0.2% of distance traveled, or 0.1mm (0.00394 in.), whichever is greater | | |
| **Repetition accuracy** | | 0.1 mm or less (excluding stretching/contraction of the material)<br>Range for assured repetition accuracy (*)<br>For materials with a width exceeding 610 mm (24 in.): Length 4,000 mm (157-7/16 in.) (CX-500/400 only)<br>For materials with a width of 610 mm (24 in.) or less : Length 8,000 mm (314-15/16 in.) | | |
| **Interface** | | Parallel (Centronics compatible), USB (Rev 1.1) | | |
| **Buffer size** | | 2 MB (1.3 MB for replot buffer) | | |
| **Instruction system** | | CAMM-GLIII (mode1 and mode2) | | |
| **Switches** | | Power switch, Pen force slider | | |
| **Control keys** | | PRESET, FORCE, SPEED, ORIGIN, MENU, ENTER, PAUSE, SHEET CUT, TEST CUT, ▲, ▼, ◄, ► | | |
| **LED** | | POWER/ERROR LED, SETUP LED, PAUSE LED | | |
| **Display** | | Liquid crystal display unit: 20-character by 2 lines | | |
| **Power consumption** | | Maximum: 0.8A/100V to 240V ± 10% 50/60 Hz | | |
| **Acoustic noise level** | | Cutting mode: under 62dB (A) Standby mode: under 40dB (A)<br>(According to ISO 7779) | | |
| **Dimensions** | **Main unit** | 1602 mm (W) x 264 mm (D) x 398 mm (H)<br>(63-1/16 in. (W) x 10-3/8 in. (D) x 15-11/16 in. (H)) | 1407 mm (W) x 264 mm (D) x 398 mm (H)<br>(55-3/8 in. (W) x 10-3/8 in. (D) x 15-11/16 in. (H)) | 1144 mm (W) x 264 mm (D) x 398 mm (H)<br>(45-1/16 in. (W) x 10-3/8 in. (D) x 15-11/16 in. (H)) |
| | **With stand** | 1602 mm (W) x 727 mm (D) x 1113 mm (H)<br>(63-1/16 in. (W) x 28-5/8 in. (D) x 43-13/16 in. (H)) | 1407 mm (W) x 727 mm (D) x 1113 mm (H)<br>(55-3/8 in. (W) x 28-5/8 in. (D) x 43-13/16 in. (H)) | 1144 mm (W) x 727 mm (D) x 1113 mm (H)<br>(45-1/16 in. (W) x 28-5/8 in. (D) x 43-13/16 in. (H)) |
| **Weight** | **Main unit** | 38 kg (83.8 lb.) | 32 kg (70.5 lb.) | 27 kg (59.5 lb.) |
| | **With stand** | 59 kg (130.1 lb.) | 53 kg (116.8 lb.) | 46 kg (101.4 lb.) |
| **Operating temperature** | | 5 to 40°C (41 to 104°F) | | |
| **Operating humidity** | | 35 to 80% (non-condensing) | | |
| **Accessories** | | Power cord x 1, Blade holder (XD-CH3) x 1, Blade x 1, Alignment tool x 1, Cable clamp x 1, Replacement blade for separating knife x 1, Roland software package CD-ROM x 1, Startup Manual x 1, To ensure safe use x 1 | | |

For items indicates by an asterisk "*", please see the next page.

(*) The following conditions must be satisfied:

- Material type:  3M Scotchcal Mastercut
- Special stand (a roll material must be set at the rear and on the sheet hanger)
- Side margins:  25 mm (1 in.) or more for both the left and right margins
- Front margin:  25 mm (1 in.) or more
  (After loading the material, using the display menu to select [F-EDGE] as the material type automatically sets a front margin of 25 mm (1 in.).)
- Use of the display menu's [AREA MOVE] function to perform feed of the material length plus 0.2 m and set the material correctly
- Cutting of the following data one time

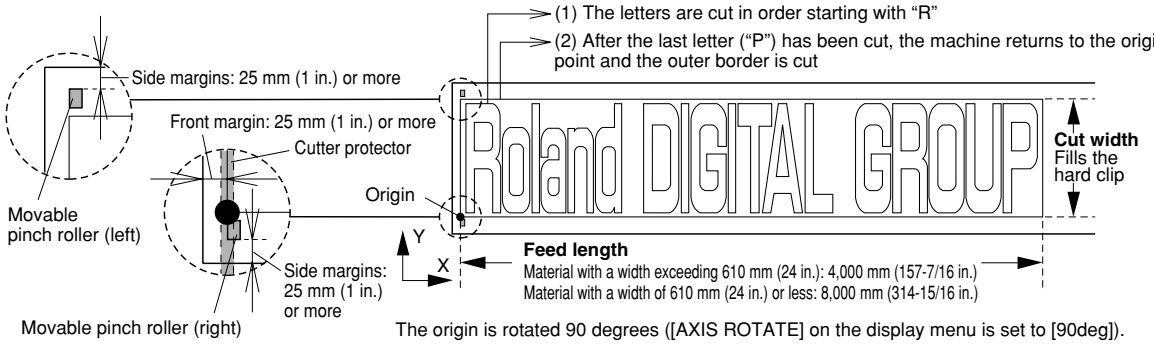


The origin is rotated 90 degrees ([AXIS ROTATE] on the display menu is set to [90deg]).

# 10-2 Interface Specifications

## [Parallel]

| | |
|---|---|
| Standard | In compliance with the specifications of Centronics |
| Input signals | $\overline{\text{STROBE}}$ (1 BIT), DATA (8 BITS) |
| Output signals | BUSY (1 BIT), $\overline{\text{ACK}}$ (1 BIT) |
| Level of input/output signals | TTL level |
| Transmission method | Asynchronous |

## [USB]

| | |
|---|---|
| Standard | Universal Serial Bus Specification Revision 1.1 |
| | Universal Serial Bus Device Class Definition for Printing Device Version 1.1 |
| Transmission speed | 12Mbps (Full Speed Device) |
| Data format | NRZI |
| Compatible connector | Series B |
| Rated cable length | 3 m |

## [Parallel connector (in compliance with specifications of Centronics)]

| Signal number | Terminal number | | Signal number |
|---|---|---|---|
| NC | 36 | 18 | HIGH** |
| HIGH* | 35 | 17 | GND |
| NC | 34 | 16 | GND |
| GND | 33 | 15 | NC |
| HIGH* | 32 | 14 | NC |
| NC | 31 | 13 | HIGH* |
| GND | 30 | 12 | GND |
| | 29 | 11 | BUSY |
| | 28 | 10 | $\overline{\text{ACK}}$ |
| | 27 | 9 | D7 |
| | 26 | 8 | D6 |
| | 25 | 7 | D5 |
| | 24 | 6 | D4 |
| | 23 | 5 | D3 |
| | 22 | 4 | D2 |
| | 21 | 3 | D1 |
| | 20 | 2 | D0 |
| | 19 | 1 | $\overline{\text{STROBE}}$ |

Pin Connection

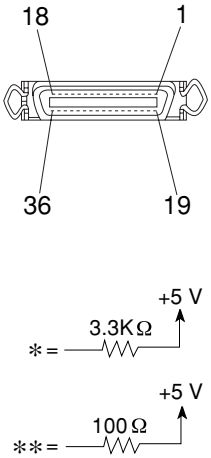


## [USB connector]

| Pin number | Signal | Remark |
|---|---|---|
| 1 | VCC | Cable power |
| 2 | - Data | |
| 3 | + Data | |
| 4 | GND | Cable ground |

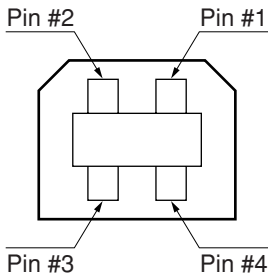

# 10-3 Instruction Support Chart

The list uses marks, each of which means:

◯ : Compatible

× : Incompatible

● : Ignored

## mode 1

| Instruction | Compatibility | Instruction | Compatibility | Instruction | Compatibility | Instruction | Compatibility | Instruction | Compatibility |
|---|---|---|---|---|---|---|---|---|---|
| H | ◯ | D | ◯ | M | ◯ | I | ◯ | R | ◯ |
| L | ◯ | B | ◯ | X | ◯ | P | ◯ | S | ◯ |
| Q | ◯ | N | ◯ | C | ◯ | E | ◯ | A | ◯ |
| G | ◯ | K | ◯ | T | ◯ | ^ | ◯ | | |

## mode 2

| Instruction | Compatibility | Instruction | Compatibility | Instruction | Compatibility | Instruction | Compatibility | Instruction | Compatibility |
|---|---|---|---|---|---|---|---|---|---|
| AA | ◯ | AR | ◯ | CA | ◯ | CI | ◯ | CP | ◯ |
| CS | ◯ | DF | ◯ | DI | ◯ | DR | ◯ | DT | ◯ |
| EA | ◯ | EC | ◯ | ER | ◯ | EW | ◯ | FT | ◯ |
| IM | ◯ | IN | ◯ | IP | ◯ | IW | ◯ | LB | ◯ |
| LT | ◯ | OA | ● | OC | ● | OE | ● | OF | ● |
| OH | ● | OI | ● | OO | ● | OP | ● | OS | ● |
| OW | ● | PA | ◯ | PD | ◯ | PR | ◯ | PT | ◯ |
| PU | ◯ | RA | ◯ | RR | ◯ | SA | ◯ | SC | ◯ |
| SI | ◯ | SL | ◯ | SM | ◯ | SR | ◯ | SS | ◯ |
| SP | ◯ | TL | ◯ | UC | ◯ | VS | ◯ | WD | ◯ |
| WG | ◯ | XT | ◯ | YT | ◯ | | | | |

## Instruction in mode 1 and mode 2

| Instruction | Compatibility | Instruction | Compatibility | Instruction | Compatibility | Instruction | Compatibility |
|---|---|---|---|---|---|---|---|
| !FS | ◯ | !NR | ◯ | !PG | ◯ | !ST | ◯ |

# - MEMO -



R5-020403